BAUER

FOR A GREEN WORLD

ASSEMBLY MANUAL

FOR

BAUER CORNER SYSTEM

Version: VIII / 2012
850 9975

Assembly Manual
CORNER SYSTEM
English

Introduction

Thank you for buying a BAUER CORNER SYSTEM!

The present **manual** is a very important document that describes how to operate and service **BAUER CENTERSTAR** with **CORNER SYSTEM.** Special attention is given here to the latter aspect since a separate manual exists for the **BAUER CENTERSTAR**.

This manual describes the system as detailed as possible. If you need still more information, please contact your dealer or turn directly to **BAUER** in Voitsberg.

Please note that the content of this manual neither constitutes part of nor alters in any way any previous or existing agreement, promise or legal relationship. **BAUER**'s commitment is based solely on the respective purchase contract which also contains the complete and only valid warranty agreement. Said contractual warranty is neither extended nor limited by the content of this manual.

All information contained in the present manual is based on the latest product details available at the time of printing.

BAUER reserves the right to change without notice without assuming any liability!

BAUER CORNER SYSTEM is designed for highest performance safety and reliability provided it is operated in accordance with the present operating instructions.
Therefore you should study this manual thoroughly before starting your **BAUER CORNER SYSTEM**!
Strictly observe all instructions pertaining to system handling, operation and service!
On this condition, **BAUER CORNER SYSTEM** will operate to your satisfaction for many years!

⚠	**Non-observance of this manual may cause personal injury or damage the equipment!**

This manual is to be considered an integral part of **BAUER CORNER SYSTEM**. Suppliers of both new and used systems are advised to put down in writing that they delivered the manual together with the system.

Please make this manual available to your staff. State the pump type and serial number of your BAUER CORNER SYSTEM in all inquiries, correspondence, warranty problems or parts order.

We wish you a lot of success with BAUER CORNER SYSTEM!

Product details

Date of delivery .....

Date of initial operation .....

Type	**BAUER CORNER SYSTEM**	
Serial number	.....	
Central tower	**fixed**.....	
Configuration of span	.....	
Spans	**fixed**.....	
Booster pump	**yes**	**no** .....
Endgun	**yes**	**no** .....
Equipment	.....	
Comments	.....	
	.....	
	.....	
	.....	

Producer of the machine:

Röhren- und Pumpenwerk BAUER Ges.m.b.H.
Kowaldstrasse 2
A – 8570 Voitsberg
Tel.: +43 3142 200 – 0
Fax: +43 3142 200–320 / -340
e-mail: sales@bauer-at.com
www.bauer-at.com

Dealer:

Name: ……

Address: ……

……

Tel. / Fax: ……

Index

1 GENERAL INSTRUCTIONS

CE SYMBOL

The **CE symbol** that has to be affixed on the machine by the manufacturer outwardly demonstrates compliance of the machine with the directives for machines and other relevant EU directives.
EG conformity certificate (see Annex)

WARNING!	This “Warning” symbol refers to important safety instructions in this manual. Whenever you see this symbol be aware of possible injury hazards. Read the note following the symbol very carefully and inform the other operators accordingly.

CAUTION!	Non-observance of this instruction may damage or destroy the machine or individual components.

NOTE!	It is very important to observe this note or instruction carefully!

Qualified operators

These are persons who on behalf of their training, experience and instruction as well as their knowledge of relevant standards, rules, precautions to be taken for accident prevention, and prevailing operating conditions, have been authorized by the person in charge of plant safety to perform the respective tasks required, and in doing so are able to recognize and avoid potential hazards. Among other things, knowledge of first-aid procedures is also required.

Product liability

According to the product liability law every farmer is an entrepreneur!

According to §9 PHG (Product Liability Law), liability for damage to corporeal things caused by defective products is expressly excluded. This exclusion of liability also applies to parts not manufactured by BAUER itself but purchased from external suppliers.

Duty to furnish information

Even if he passes on the machine to a new owner later-on, the customer is obliged to hand on the operating manual to the new owner, too. The receiver of the machine must be instructed with reference to the mentioned regulations.

Intended use

- BAUER CORNER SYSTEM has been constructed exclusively for use in normal irrigation (intended use).
- Any employment beyond this normal use is considered non-conforming. The manufacturer is not liable for damage resulting from such non-conforming use, the sole liability for damage from non-conforming use is with the user.
- Intended use also includes compliance with manufacturer’s operating, maintenance and service instructions.
- The BAUER CORNER SYSTEM may be used and operated only by persons who are familiar with the system and aware of the hazards involved.
- All relevant rules for accident prevention as well as any other generally accepted specifications and regulations relating to safety, work medicine and traffic law must be strictly observed.
- Unauthorised modifications on the machine release the manufacturer from liability for damage resulting therefrom.

2 WARNING SYMBOLS

Danger points on the Corner System are specifically marked by safety stickers. These stickers must be affixed at the mentioned points clearly visible and serve for protection of persons working on or near the system.

1.

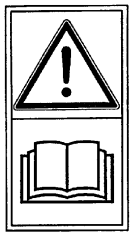

WARNING!

Study and observe the manual and all safety instruction carefully before you put the system into operation.

2.

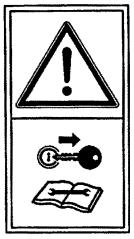

WARNING!

Before maintenance and repair work, always stop the system, disconnect all power, and read the operating manual.

3.

WARNING!

1. This system is powered by 400 Volts!
   Danger of electrical shock / injury hazard!
2. Do not attempt to check any components while the system is live.
3. Open the inner door of the control cabinet only when main disconnect is OFF.

4.

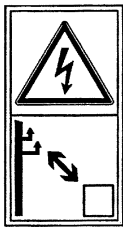

WARNING!

1. The working range of the Corner System must always be at a safe distance from electrical power line.
2. Make sure that the water jet from spray nozzles and endgun does not hit electrical lines.

5.

WARNING!

The system can start automatically. Always keep a safe distance from the towers.

6.

WARNING!

1. Do not remove shaft guards.
2. When repair work is performed on the system, make sure that system cannot start running automatically. Disconnect the complete system from power.

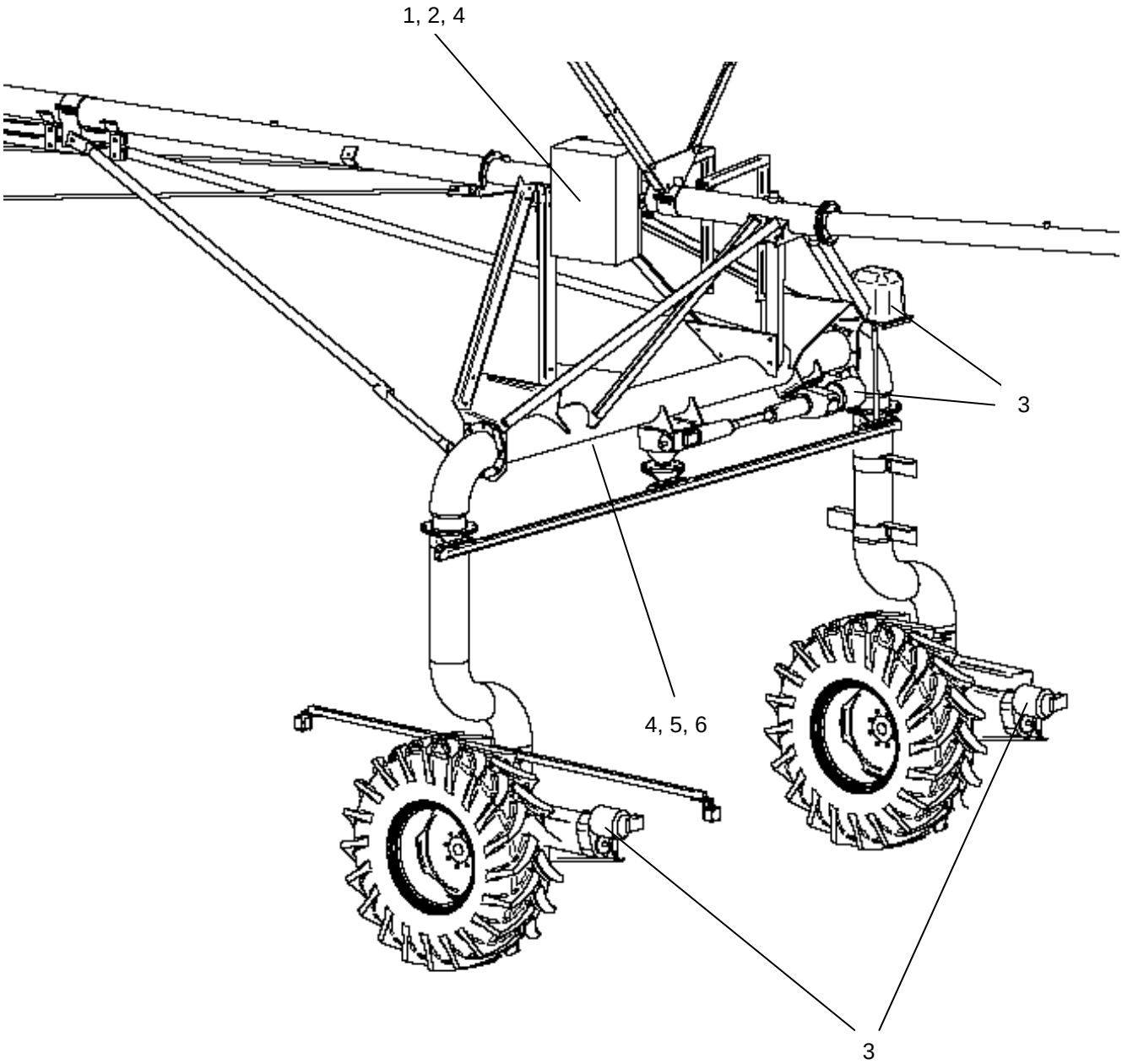

3 GENERAL

WARNING!
The operation of a BAUER CORNER SYSTEM requires detailed knowledge of a center pivot irrigation system. Always read the operating manual for the CENTERSTAR before continuing to the BAUER CORNER SYSTEM!

The **BAUER PRECISION CORNER** is part of an irrigation system rotating around a fixed center (pivot tower) and thereby irrigating a full circle or a part circle. Like the center pivot irrigation system itself, the BAUER CORNER is a fully automated system and consists of a truss structure, a moving tower and an overhang; it is attached to the end of a center pivot irrigation system.

The BAUER CORNER is connected to the center pivot irrigation system via a pivoting connection and can "swing inward" to just over a right angle and "swing outward" almost all the way straight (approx. 15°). The steering system on the CORNER makes this movement possible.

The BAUER BELOW GROUND GUIDANCE guides the corner tower precisely along a predefined track.

Use of a BAUER CORNER SYSTEM allows optimal use of the available area in connection with a square-shaped field or an area with irregular field borders or obstacles.

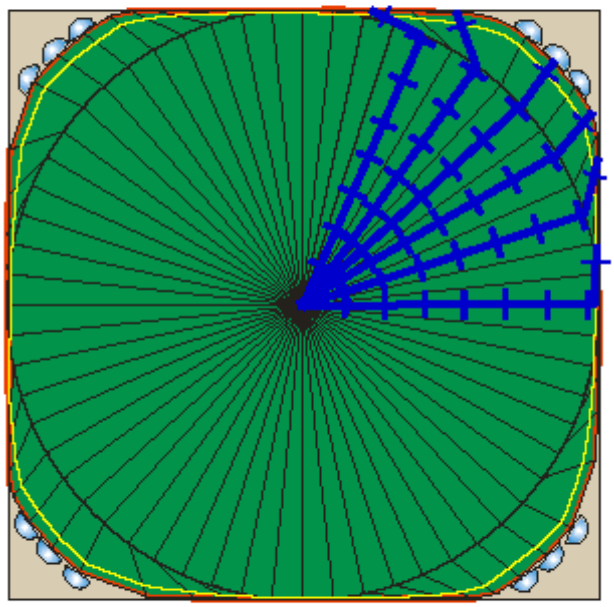

Uniform water distribution is ensured via sequential activation and deactivation of the irrigation nozzles. Actuation of the hydraulic valves takes place pneumatically.

The BAUER CORNER is driven electrically with continuous motion.

4 GENERAL INSTRUCTIONS FOR SAFETY AND ACCIDENT PREVENTION

Check the operational safety of the machine before every start.

1. In addition to the instructions in this manual, be sure to observe all specifications generally valid for safety and accident prevention!
2. The warning signs and notes affixed to the machine contain information essential to safe operation. Observing them serves your own personal safety!
3. Do not start the machine unless all guards and safety devices are mounted completely and in proper working position!
4. Acquaint yourself with all system components and controls as well as their respective functions, before you start to work. It is too late for this when the system is already running!
5. Check the vicinity of the system before start-up (children)! Make sure that sight is unobstructed!

Electrical system check-up

1. Before the first start-up, check the electrical system and ensure that the installation complies with the safety requirements.
2. Check the electrical system visually before every start-up.
3. All work beyond normal maintenance of the system is to be performed by a qualified service person only!
4. Never repair or service any part of the system before all power has been disconnected!

Maintenance

- As a rule, maintenance and cleaning work as well as repairs of malfunctions may be done only with the drive and the motor turned off!
- Check proper seat of nuts and screws regularly, and tighten them, if needed!
- Dispose of oil, grease, and filters in accordance with regulations!
- Always disconnect system from power before starting any work on the electrical system!
- Before electrical welding on the system itself or built-on components, disconnect the mains or generator supply cable!
- Spare parts must meet minimum technical requirements by the manufacturer of the device! This is guaranteed by original equipment parts!

5 SAFETY PRECAUTIONS FOR THE BAUER CORNER SYSTEM

In addition to the GENERAL INSTRUCTIONS FOR SAFETY AND ACCIDENT PREVENTION, the following safety principles must be observed for operating the BAUER CORNER SYSTEM.

5.1 GROUNDING

WARNING!

THE PIVOT SYSTEM MUST BE GROUNDED COMPLETELY!

1. All metal parts of the system must be connected with each other; the tower coupling, which connects the BAUER CORNER with the center pivot irrigation system, must be bridged with a cable.
2. Moreover, the entire metal structure of the pivot must be connected and grounded at the pivot tower with an earthing rod or earthing bar in such a manner that the grounding resistance according to the legal code is complied with (see here the CENTERSTAR operating manual)
3. In addition, the yellow-green protective conductor lead along with the power supply must be connected to the grounding terminal in the control unit and therefore grounded properly (see here the CENTERSTAR operating manual).
4. Dimensioning of grounding, grounding nail or grounding bar must be executed by a qualified electrical contractor (see here the CENTERSTAR operating manual).

5.2 ELECTRICAL SYSTEM

WARNING!

Since the system is powered by 400V, always practice extreme caution when dealing with the electrical system and the electric drive!

1. Before working on system electrical components, make sure the system is disconnected from all poles and sources.
2. Provide a lock-out at the main disconnect to protect yourself against unintentional reclosing.
3. Verify safe isolation from supply.
4. Never repair or short-circuit a fuse by means of a wire or any other item.
5. Immediately replace all wires with defective insulation.
6. Short-circuiting of system safety circuit is to be done only by a qualified person and only for the purpose of realigning a span.

5.3 MECHANICAL SYSTEM

WARNING!

1. Never service or repair any part or system component while the plant is operating.
2. Always disconnect the system from power before starting any maintenance work. Turn the main disconnect to “0” and lock the switch to prevent unintentional reclosing. Do not depend on others to disconnect the power – do it yourself!
3. Before you start, make sure that all persons have left the operating range of the system.
4. Make sure that no objects or vehicles are in or near the system tracks when system is running/starting to operate.
5. When the system is operating, the CORNER tower as well as all other towers switch on and off automatically, therefore keep a safe distance from the towers.
6. Never step on the system while it is running.

7. Utmost care is required by the operator when spans are aligned (see also the CENTERSTAR operating manual).
8. Always turn off the system and the water supply before working on sprinklers or spray nozzles. Make sure that the pneumatic compressor is depressurized.
9. Use adequate means of access (ladder, elevating platform) for work on sprinklers or spray nozzles.
10. Proceed with the utmost caution when system is working near or under electric power lines. Make sure that neither the CORNER SYSTEM itself nor the water jets come into contact with live wires.
11. Make sure that no neighbouring plots or roads are irrigated by the endgun. This could cause damage or accidents.
12. If fertilisers or other chemicals are added to the irrigation water, avoid the mist and do not inhale it.

6 TECHNICAL DESCRIPTION

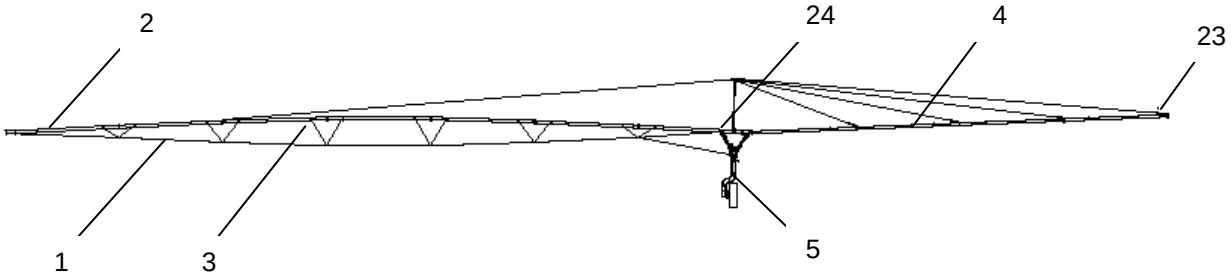

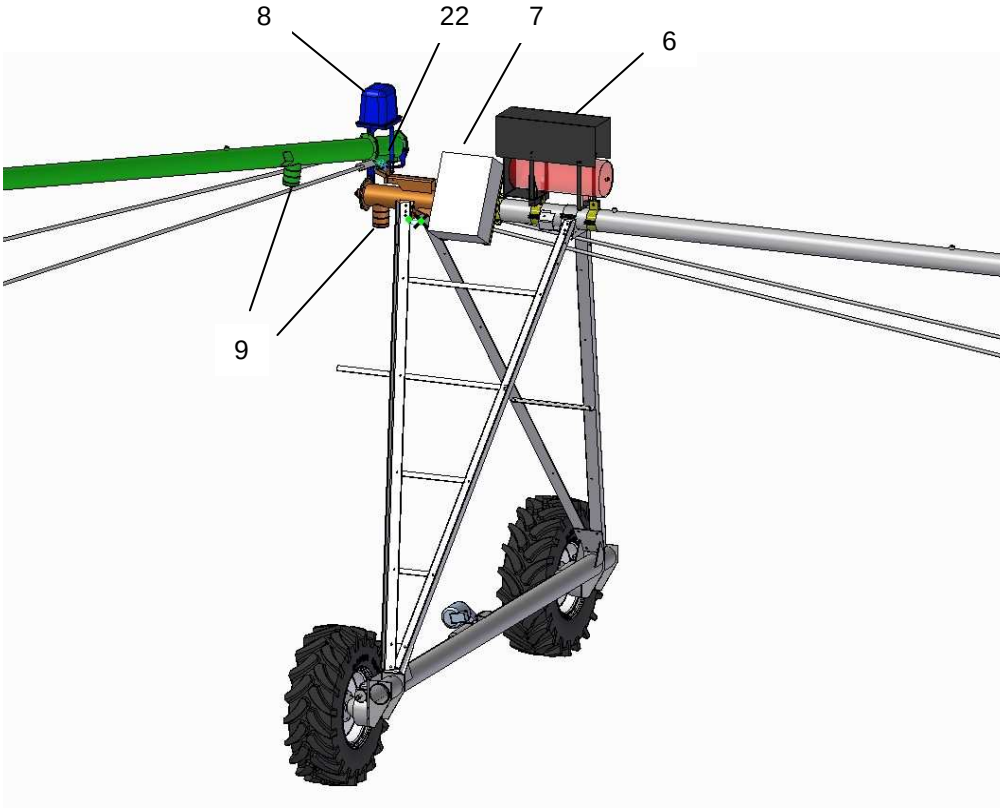

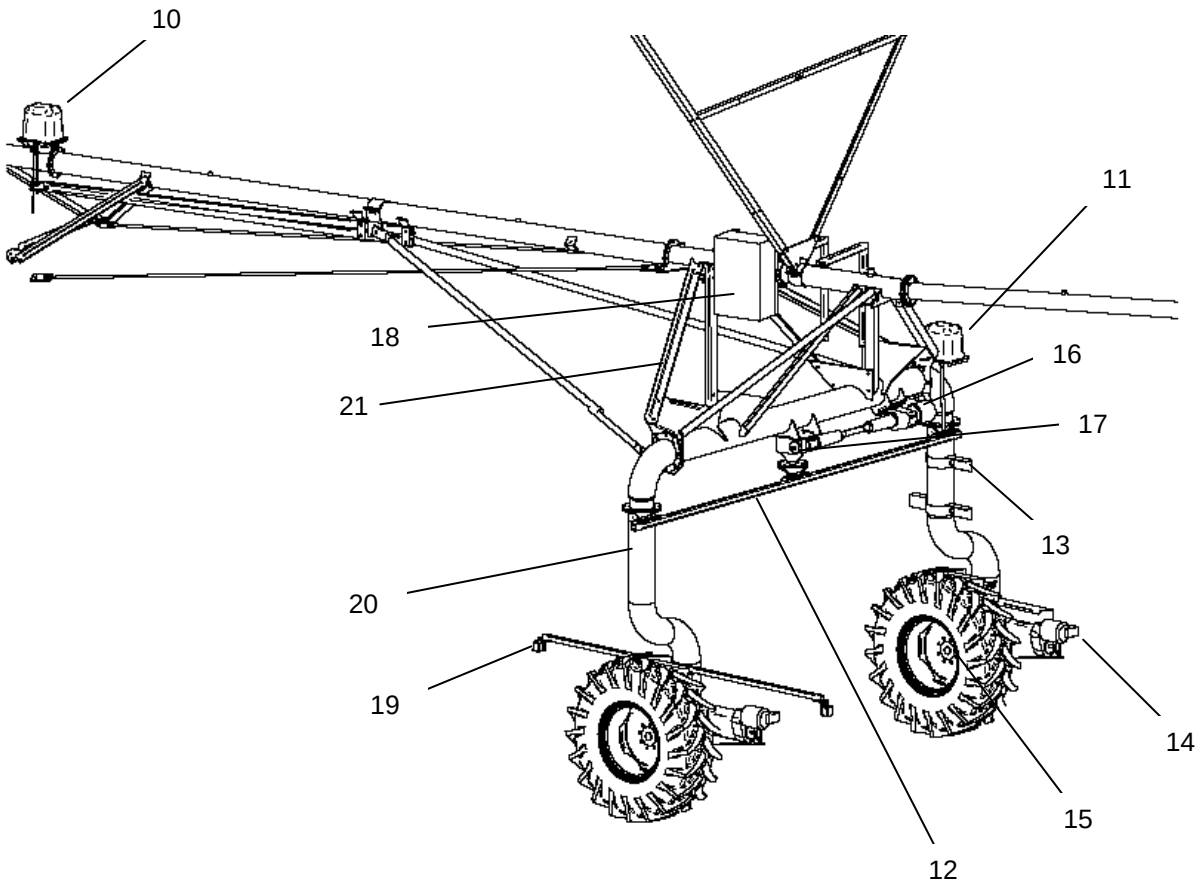

1 Truss rod
2 Main pipe
3 Bracing angle
4 Overhang
5 Tower
6 Nozzle control
7 End tower control cabinet
8 Angle sensor tower box
9 Connection hose
10 Span sensor tower box
11 Steering tower box
12 Steering bar
13 Climbing aid
14 Drive motor
15 Wheel / wheel gearbox
16 Steering motor
17 Steering gearbox
18 Track unit control cabinet
19 Steering antennas
20 Wheel base
21 Tower bracing angle
22 Corner tower coupling
23 Endgun
24 Booster Pump

CORNER SYSTEM COMPONENTS

SPAN
Arc-shaped truss structure consisting of pipes, truss rods and bracing angles.

PIPE
Water-conducting part of the machine.

TRUSS ROD
Round stock – connects the bracing angles.

BRACING ANGLES
Angle section – connects pipe and truss rods.

CORNER TOWER
Provides the electromechanical drive of the system and carries the span weight.

WHEEL BASE
Tower base with driving motor and gearbox.

TOWER BRACING ANGLE
Angle section – connects span and wheel base / cross pipe.

DRIVE MOTOR
Electric motor with reducing gear.

GEARBOX
Transmits the torque of the drive motor onto the wheels.

TOWER COUPLING
Joint between the spans. Possible articulation: up to 30%, swing angle of max. 90°.

CONNECTION HOSE
Water feed point for the CORNER SPAN

STEERING
Ensures the directional control of the CORNER tower movement.

STEERING DRIVE
Electric motor with reducing gear.

STEERING GEARBOX
Transmits the torque of the steering motor to the steering bar.

STEERING BAR
Transmits the steering movement to the rotatable CORNER tower wheels.

STEERING ANTENNAS
Detect the track guidance signal for the directional control of the CORNER tower movement. The steering antennas are part of the BAUER BELOW GROUND GUIDANCE.

TOWER BOXES

ANGLE SENSOR TOWER BOX
Monitors the angle between the CORNER SPAN and the center pivot irrigation system, required for switching the valves of the irrigation nozzles.

SPAN SENSOR TOWER BOX
Monitors the elastic deformation / bending on the CORNER TRUSS STRUCTURE, thereby regulating the speed of the corner tower drive.

STEERING TOWER BOX
Monitors the position of the tower wheels and limits the maximum "steering angle".

Overhanging part from corner tower to system end.

ENDGUN
Wide-range sprinkler at the end of the overhang serves for extra spraying range

BOOSTER PUMP
Electric pump on the last tower for increase of pressure to endgun.

NOZZLE CONTROL
Distribution of the irrigation nozzles on the CORNER truss structure into 9 switching groups, pneumatic compressor for actuation of the hydraulic valves.

END TOWER CONTROL CABINET
Control for continuous driving of the END TOWER, sequential activation and deactivation of the irrigation nozzles on the CORNER truss structure for uniform water distribution during the process of swinging in or out.

TRACK UNIT CONTROL CABINET
Control of the steering of the CORNER tower as well as the CORNER tower drive based on continuously collected data from the SPAN SENSOR TOWER BOX. Monitoring of the maximum "steering angle" with the help of the STEERING TOWER BOX.

CLIMBING AID
For climbing onto the CORNER tower or up to the control cabinet.

WARNING!
Note that fall protection with a rope and harness is required for climbing and for work at heights greater than 2.5 m. Failure to heed this requirement can result in severe injuries or even death.

BELOW GROUND GUIDANCE

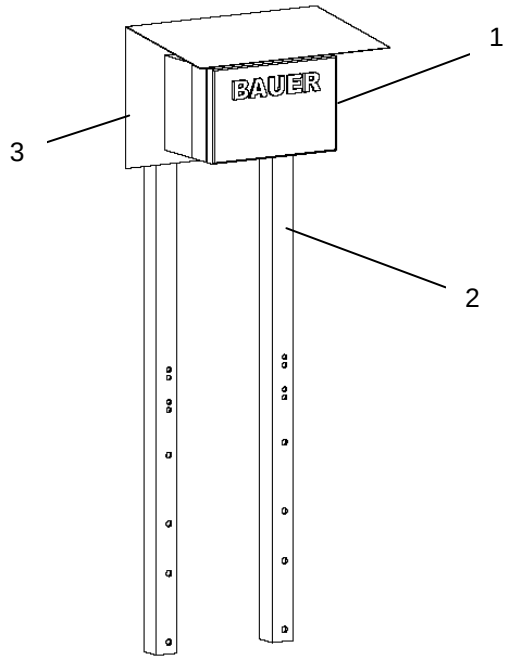

1 Frequency generator
2 Mounting bracket
3 Cover
4 Track unit (contained in control cabinet - Track unit)

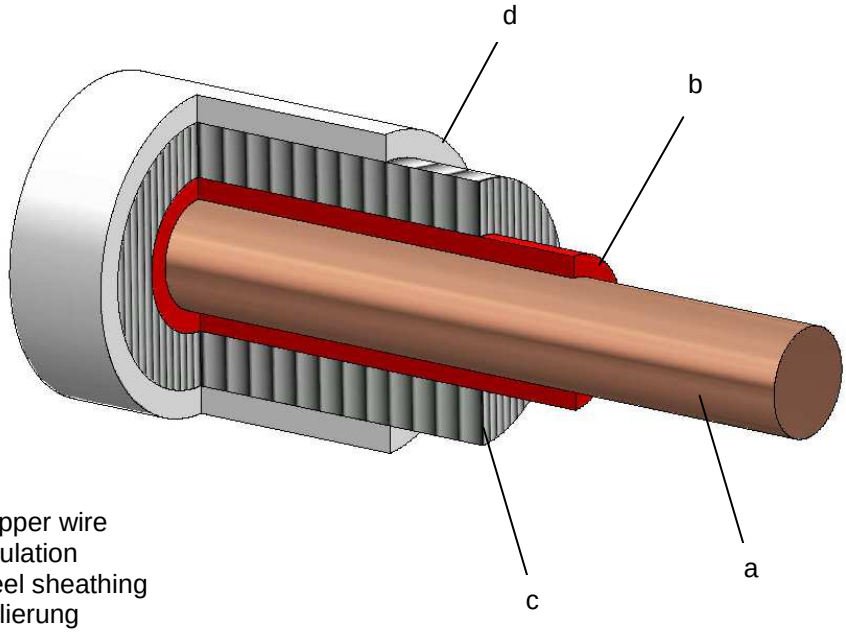

a) Copper wire
b) Insulation
c) Steel sheathing
d) Isolierung

FREQUENCY GENERATOR
Generates the signal required for the track guidance. This is fed into the conductor loop (underground cable).

MOUNTING BRACKET
The frequency generator and cover are mounted to the two mounting brackets. The two mounting brackets are inserted directly into the soil of the field.

COVER
The cover protects against weathering influences such as rain, wind, sun, etc.

TRACK UNIT
The signal received by the steering antenna is processed in the TRACK UNIT and sent to the control unit, which in turn sends a signal to the steering motor as necessary in order to implement a correction to the direction of motion.

UNDERGROUND CABLE
An underground cable specially developed for Bauer is used to transmit the underground signal. It must be noted that flawless and long-lasting functioning can only be guaranteed with use of an original BAUER underground cable.
The BAUER underground cable consists of a PVC-insulated copper wire with a steel sheathing that serves to protect against gnawing (by rodents, etc.).

STEERING ANTENNAS
For description, see above

7 PERMISSIBLE ANGLE

7.1.1 **ROTATION**

The permissible rotation is *14%,* or *8°*. This means that the level difference between the wheels of the CORNER drive tower may not exceed 0.5 m.

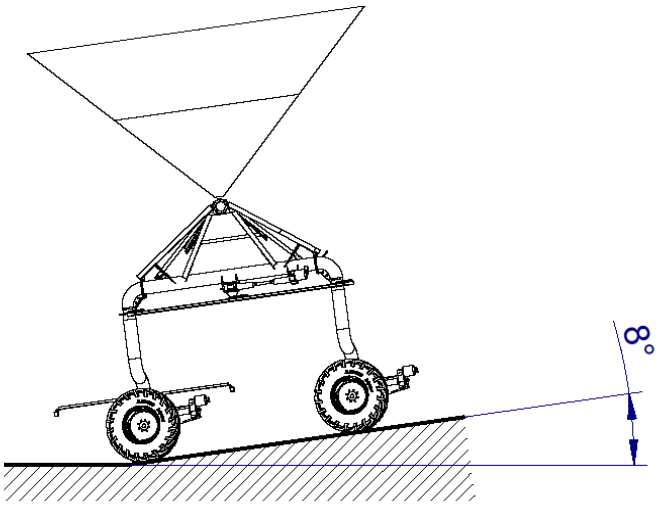

7.1.2 **VERTICAL**

The permissible vertical angle is *10%,* or *5.7°*.

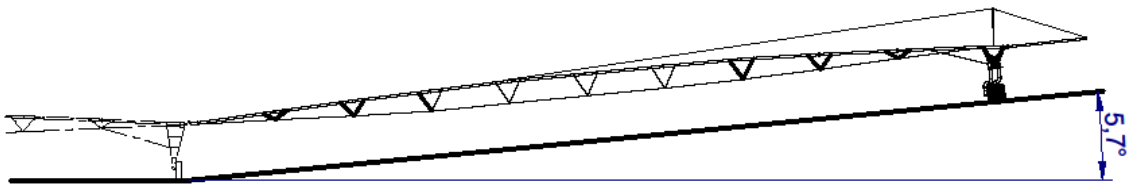

8 TERMS

Corner Span

A span is essentially a truss structure with a moving tower (drive tower). The CORNER span is the last truss structure with a steerable CORNER drive tower in a CORNER System.

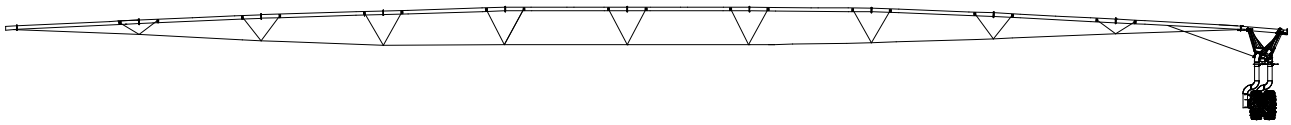

Forward

Seen from above the CORNER SYSTEM is travelling clockwise.

Reverse

Seen from above the CORNER SYSTEM is travelling counter-clockwise.

Inward

Towards the pivot.

Outward

Towards the last tower.

Swinging inward

The corner span moves toward the 90° position (viewed relative to the pivot).

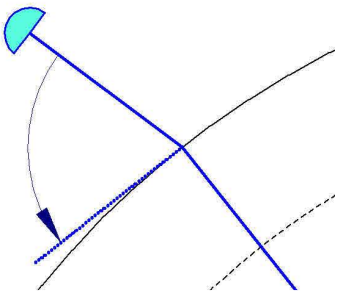

Swinging outward

The corner span moves away from the 90° position (viewed relative to the pivot).

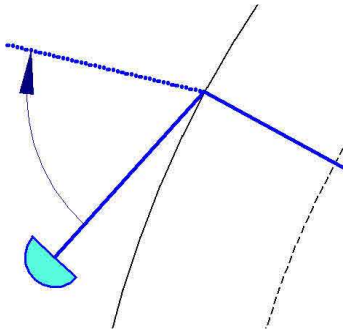

9 PREPARATIONS FOR ASSEMBLY

9.1 STAFF REQUIREMENT

Following staff is required for efficient and safe installation:
4 fitters, at least one of them must be a qualified electrician
1 crane driver
Must have experience in steel construction.

9.2 TOOLS AND EQUIPMENT REQUIRED

1 A crane truck or a vehicle with hoisting system with following capacity:
Loading capacity 3 tons
Crane hook clearance 5 m
Working range 3 m
2 2 nylon sling bands 3 m, for 3 tons load
3 1 pneumatic or electrical impact screw driver (½“ driving square, torque 30-250Nm)
4 1 two-part ladder, length 3 – 6 m
5 Fitter’s and electrician’s tools consisting of:
5.1. Double-ended open-jawed spanner (DIN 31107) SW 13, 17, 19, 22, 24, 27, 30, 36
5.2. Double-ended ring spanner (DIN 838) SW 13, 17, 19, 22, 24, 27, 30, 36
5.3. Set of sockets for wrenches ½“ for impact screw driver with inserts (DIN 3124) SW 17, 19, 22, 24, 27, 30
5.4. 1 set screw drivers
5.5. small screw drivers, one each 6,5 x 25 and 8 x 35
5.6. 1 pipe wrench 1½“
5.7. 1 cable stripper 0,8 – 6,0 mm²
5.8. 1 combination pliers (DIN 5244)
5.9. 1 crimping tool for cables, pressing range 2,5 – 6,0 mm²
5.10. 1 side cutting pliers, length 200 mm
5.11. 1 cable stripping knife, length 190 mm
5.12. fitter’s hammer, 200 gram
5.13. 2 mounting rods, length 400 mm
5.14. 1 steel brush
5.15. 1 flat file, length 250 mm
5.16. 1 round file
5.17. 1 flat chisel
5.18. 1 cape chisel
5.19. 1 metal cutting saw
5.20. 1 screw tap ¾“
5.21. 1 rotary thread cutter ¾“
5.22. 1 water level
5.23. 1 grease gun
5.24. 2 screw clamps
5.25. 1 electric measuring and testing instrument, multimeter with ampere indication
5.26. 1 Stanley knife for pneumatic line
5.27. 1 Superglue

9.3 PRETENSIONING FORCES AND TIGHTENING VALUES OF BOLTS

The listed pretensioning forces and turning moments are guiding values for standard metric thread per DIN 13 and head requirements per DIN 912, 931, 934, 6912, 7984,and 7990 as well as thread measured in inches rough (UNC) and smooth (UNF). They result in a bolt utilisation - limit of 90°. It was based on a friction factor of 0,14 (new bolt without after treatment, unlubricated)

Screws standard metric thread DIN 13			
dimension	quality	turning moment Nm	pretensioning force N
M 8	8.8	25,5	16230
M 10	8.8	50	25791
M 12	8.8	87,3	37657
M 14	8.8	138,3	51681
M 16	8.8	210,8	71196
M 20	8.8	411,9	111305
M 24	8.8	711	160338

Screws UNC standard thread			
dimension	quality	turning moment Nm	pretensioning force N
1/4"	S	12,5	10080
5/16"	S	21,3	13954
1/2"	S	92,7	38463

Screws UNF standard thread			
dimension	quality	turning moment Nm	pretensioning force N
9/16"	S	150	57143

Don´t fasten the bolts 1/2" UNC for tightening the wheel gears with a power screwdriver.
There may be a danger in damaging the winding in the gear casing.

10 DELIVERY AND LAYING OUT THE SYSTEM

10.1 GENERAL

A pivot or CORNER SYSTEM is generally delivered to the installation site by truck. In most cases, it is not possible to drive over the assembly site with the truck; for this reason, the material is best unloaded in the vicinity of the pivot center and stored in assembly groups.
At this point in time, the completeness of the delivery can also be verified in detail. The material must be transported from this storage site to the assembly site via tractor and trailer and laid out along the assembly area.

10.2 BEFORE OR DURING LAYING OUT OF THE MATERIAL

After completed assembly of the pivot / CENTERSTAR, laying out of the material for the CORNER SPAN can begin. Start the pivot for at least one dry cycle, and continue at least until the travel track of the last tower becomes visible.

The travel track of the end tower forms the basis for surveying the *cable track* of the *underground control*.

See here the *CABLE INSTALLATION MANUAL for BAUER CORNER SYSTEM.*

10.3 GROUPING THE MATERIAL DURING UNLOADING

To simplify the transport, storage and installation, many small parts are already packed clearly organized in crates by individual assembly groups. The angle elements for the truss structures are bundled into packages and labeled with a number.
To save time and simplify removal of the components from the storage site during assembly, it is useful to organize the parts and store the following components separately:

1. Loose components, such as control cabinet, compressor and various small parts
2. Main pipes
3. CORNER end pipe, overhang end pipe
4. Truss structure / angle element packages
5. Truss rods
6. Overhang pipes
7. CORNER SYSTEM wheel base (drive tower)
8. CORNER SYSTEM cross tube (drive tower)
9. Drive tower angle element
10. Left wheel, right wheel
11. Crates with small parts for the truss structure and drive tower, gearboxes, drive motors, drive shafts, shields, tower boxes, pneumatic lines, etc.
12. Nozzle pipes and nozzles

10.4 SELECTION OF THE ASSEMBLY AREA

Starting from the end tower of the pivot, select an area for assembly of the CORNER SPAN that is as level as possible. This is required to ensure that the truss structure lies as evenly on the ground as possible during assembly and to allow for assembly with as little twisting as possible.

We recommend laying out and assembling the CORNER SPAN in the swung-in position (90° position).

10.5 LAYING OUT THE ASSEMBLY MATERIAL

The material is normally transported from the storage site to the assembly area in multiple trips. A tractor with front loader is suitable for loading and unloading the material.

In order to minimize manual material movements as much as possible during the assembly, the material should be laid out precisely in the corresponding positions.

The truss structure of the CORNER SYSTEM is nearly identical to that of a *CENTERSTAR*; for this reason, please proceed in the same way.

For more information, please consult the separate ***assembly manual*** for the ***BAUER CENTERSTAR***.

IMPORTANT!!
All parts of the system, especially the crates with the electronic components, must be unloaded carefully and must never be thrown from the transport vehicle.

10.6 CORNER SYSTEM - SPANS

10.6.1 PIVOT ENDSPAN 59,8 M

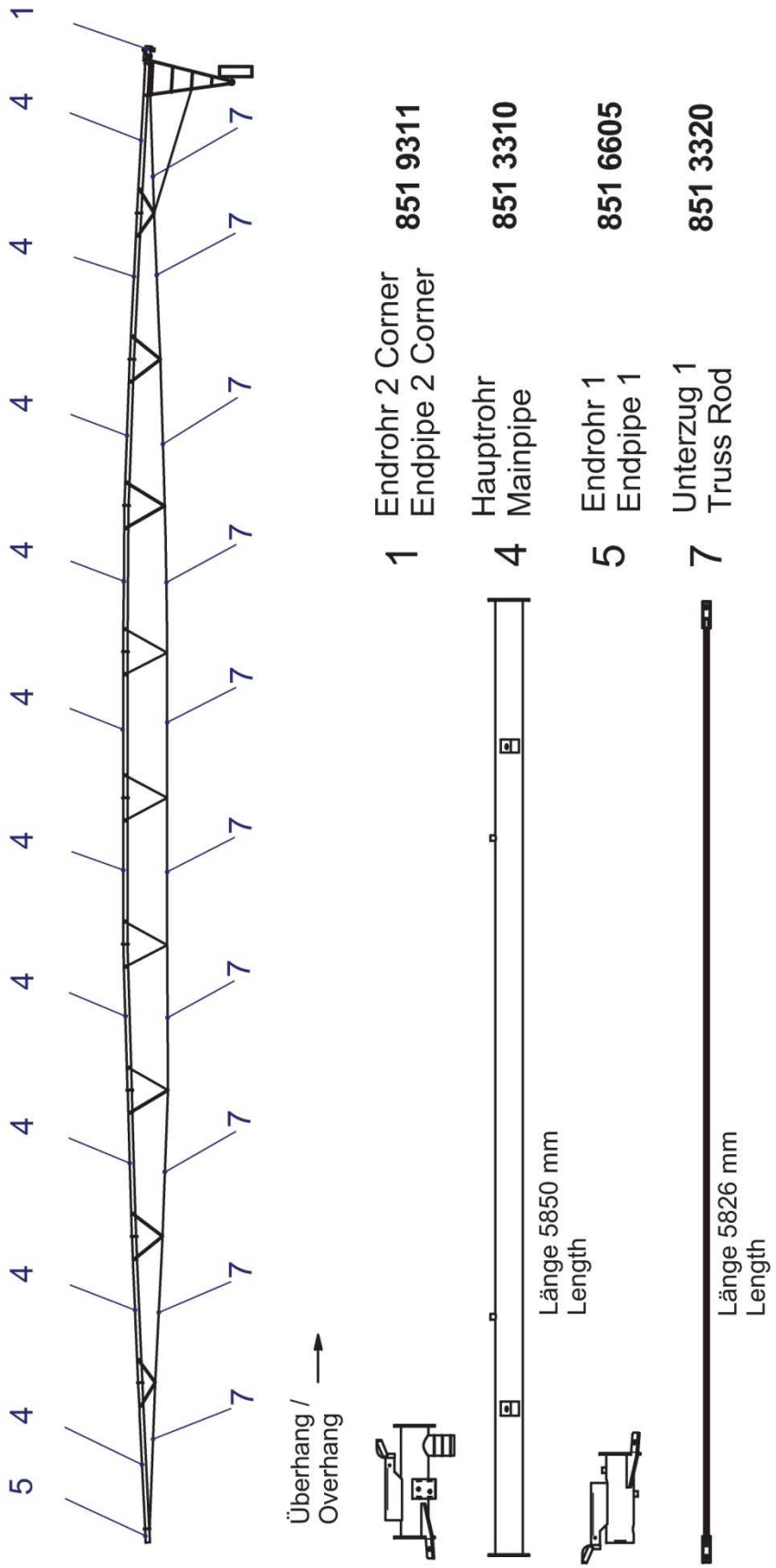

10.6.2 PIVOT ENDSPAN 54,0 M

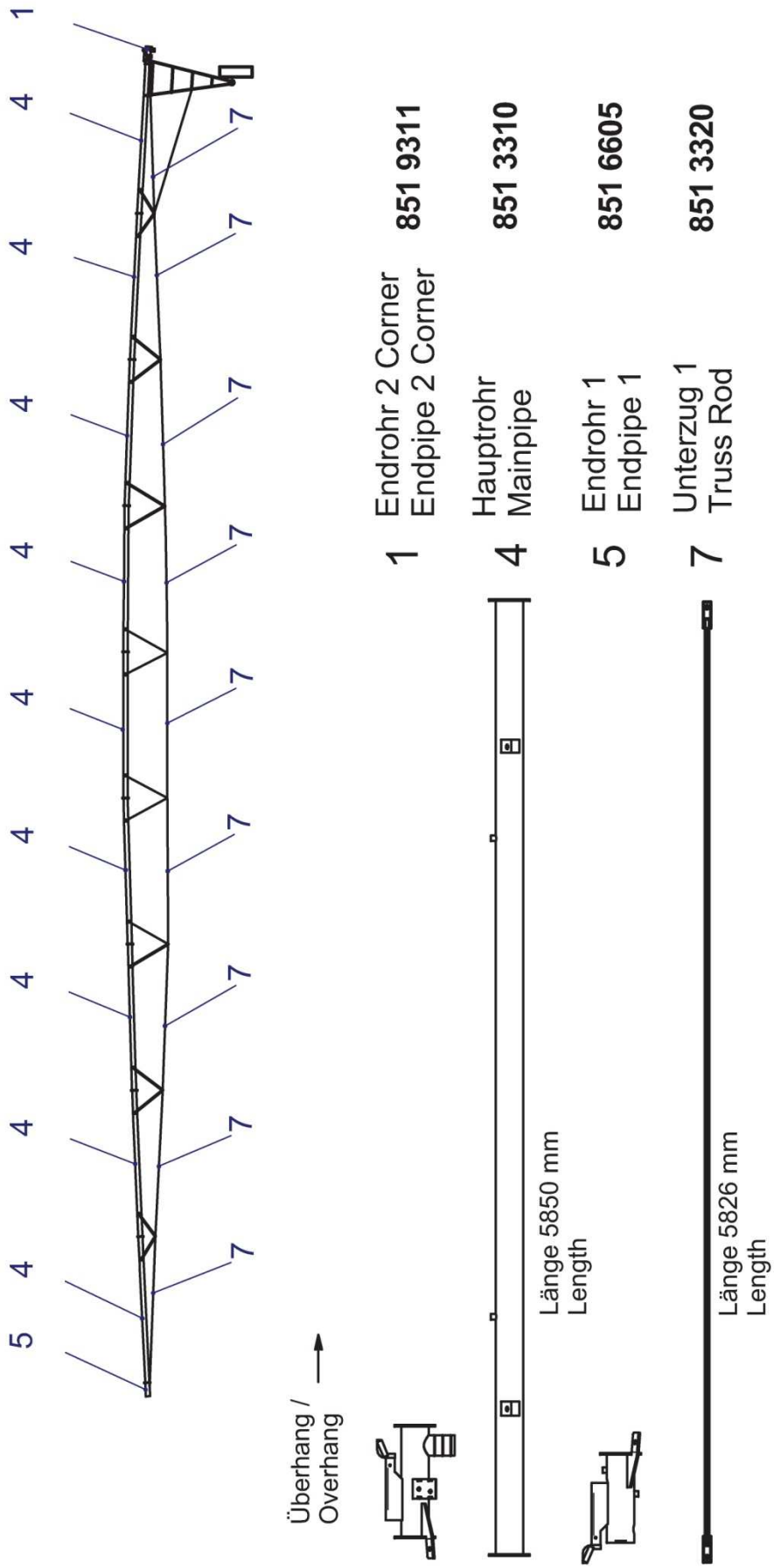

10.6.3 CORNER SPAN 61,5 M

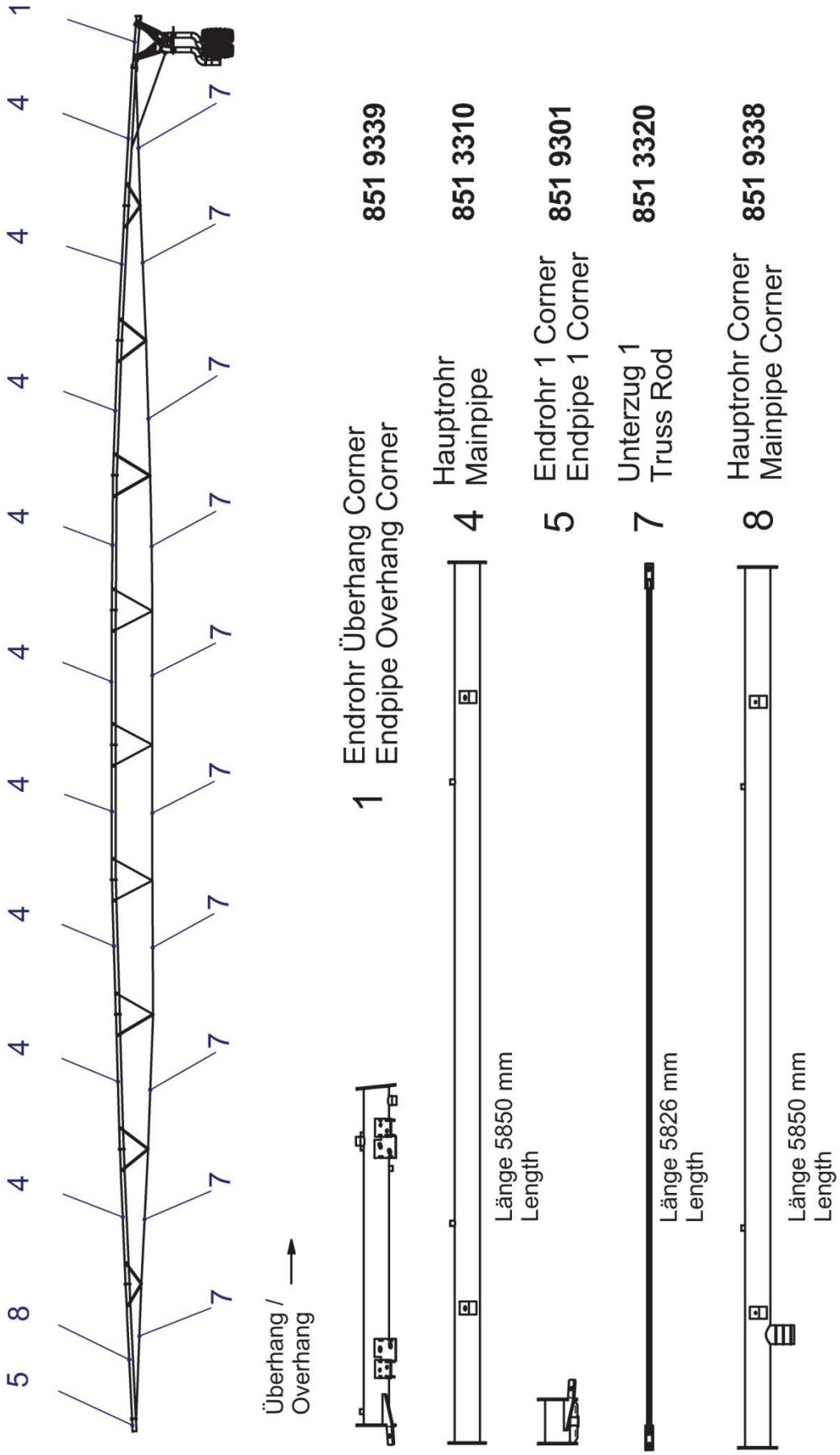

10.6.4 CORNER SPAN 61,5 M

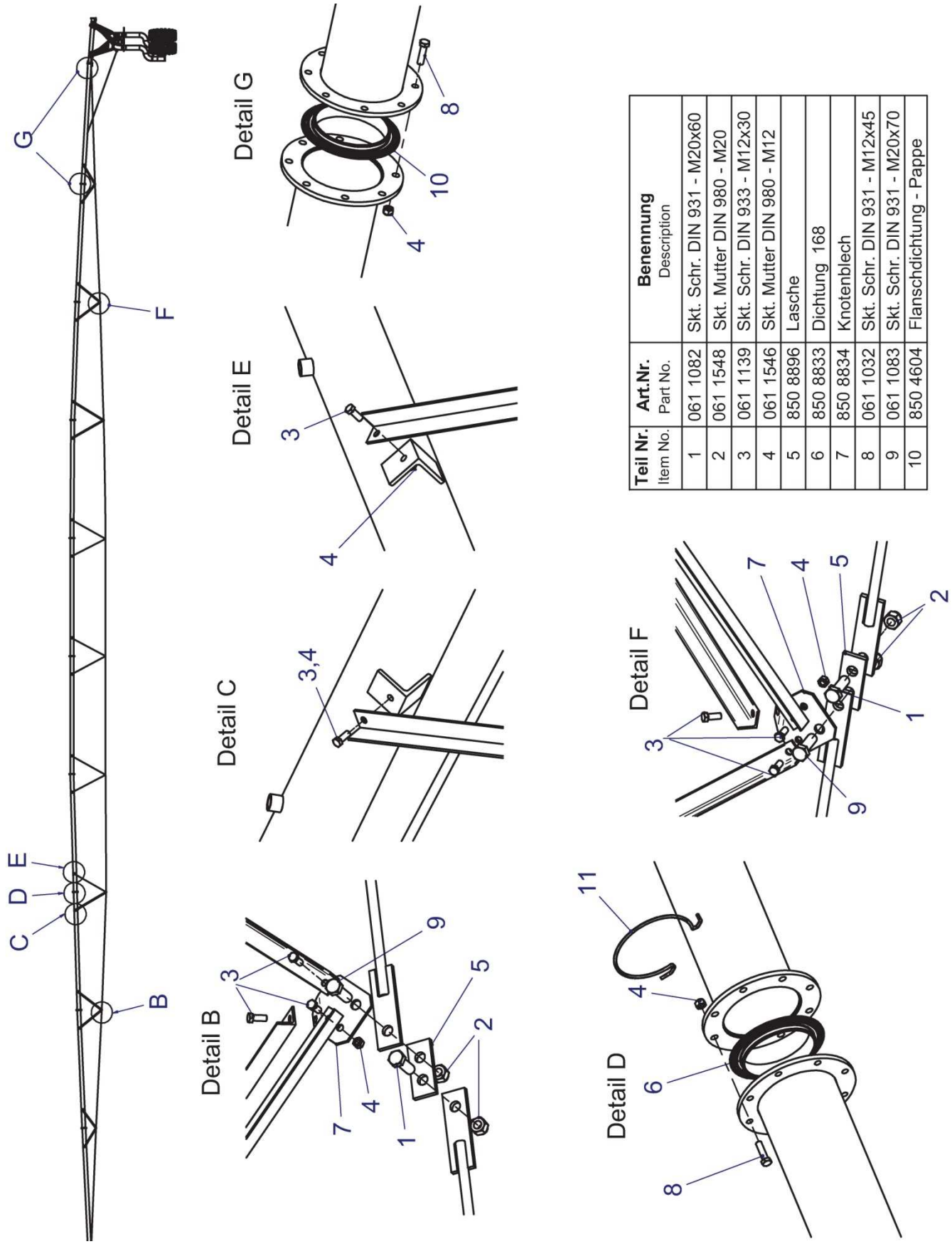

Teil Nr. Item No.	Art.Nr. Part No.	Benennung Description
1	061 1082	Skt. Schr. DIN 931 - M20x60
2	061 1548	Skt. Mutter DIN 980 - M20
3	061 1139	Skt. Schr. DIN 933 - M12x30
4	061 1546	Skt. Mutter DIN 980 - M12
5	850 8896	Lasche
6	850 8833	Dichtung 168
7	850 8834	Knotenblech
8	061 1032	Skt. Schr. DIN 931 - M12x45
9	061 1083	Skt. Schr. DIN 931 - M20x70
10	850 4604	Flanschdichtung - Pappe

10.6.5 CORNER SPAN 61,5 M

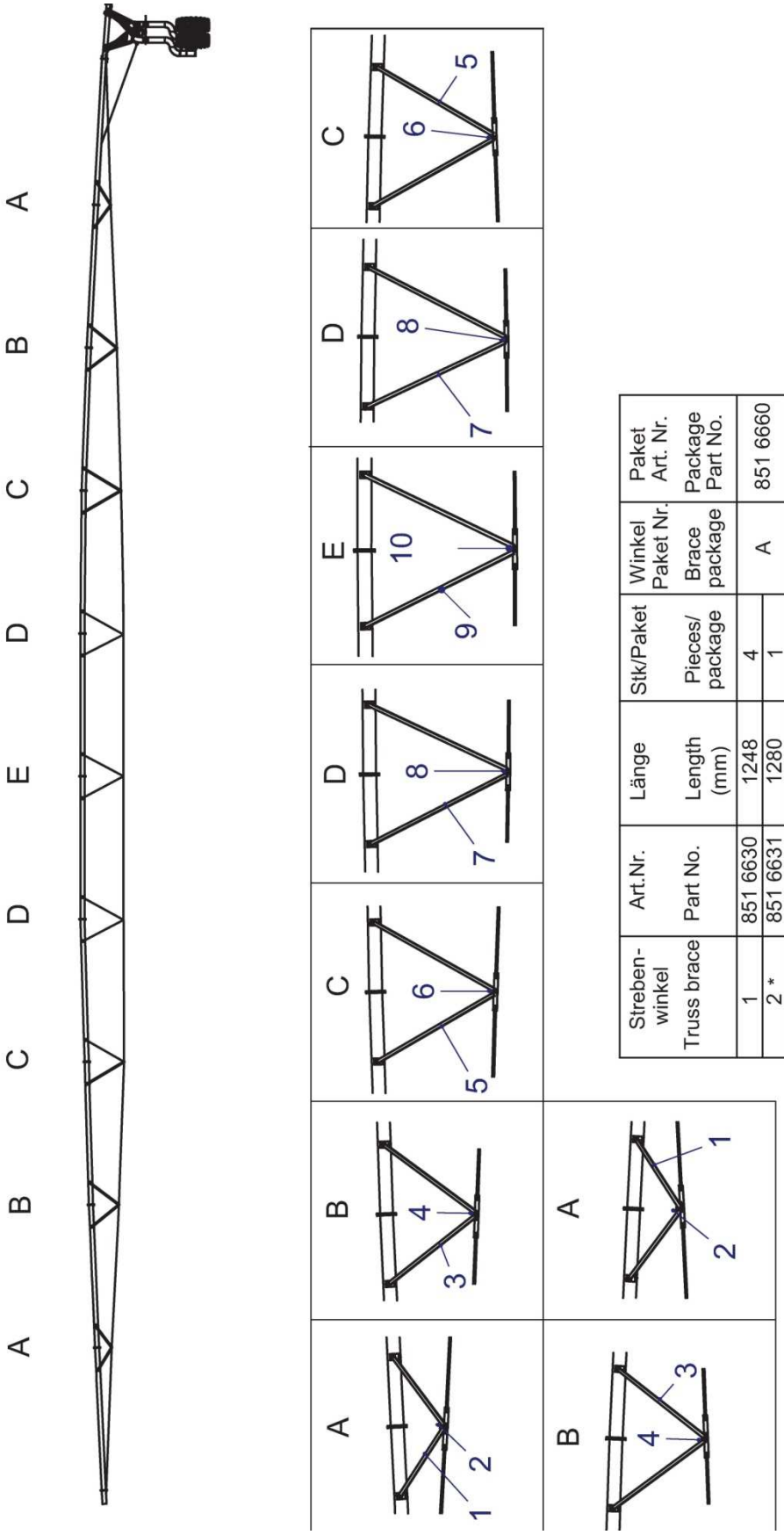

Streben-winkel Truss brace	Art.Nr. Part No.	Länge Length (mm)	Stk/Paket Pieces/ package	Winkel Paket Nr. Brace package	Paket Art. Nr. Package Part No.
1	851 6630	1248	4	A	851 6660
2 *	851 6631	1280	1		
3	851 6632	1778	4	B	851 6661
4 *	851 6633	2149	1		
5	850 8915	2217	4	C	850 8932
6 *	850 8916	2790	1		
7	850 8917	2513	4	D	850 8933
8 *	850 8918	3210	1		
9	850 8919	2635	4	E	850 8934
10 *	850 8920	3383	1		

* horizontal
horicontal

10.6.6 CORNER SPAN 55,5 M

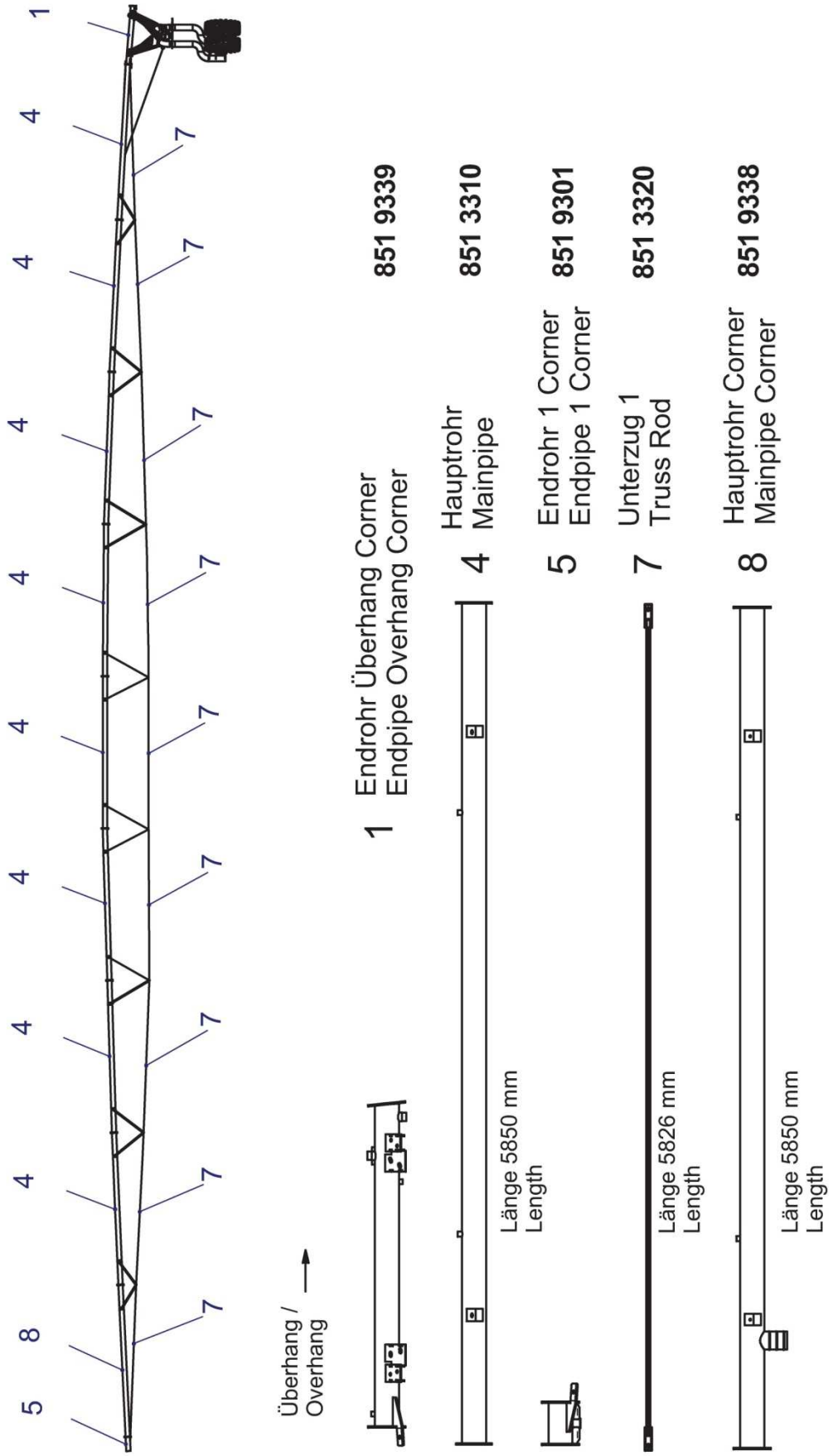

10.6.7 CORNER SPAN 55,5 M

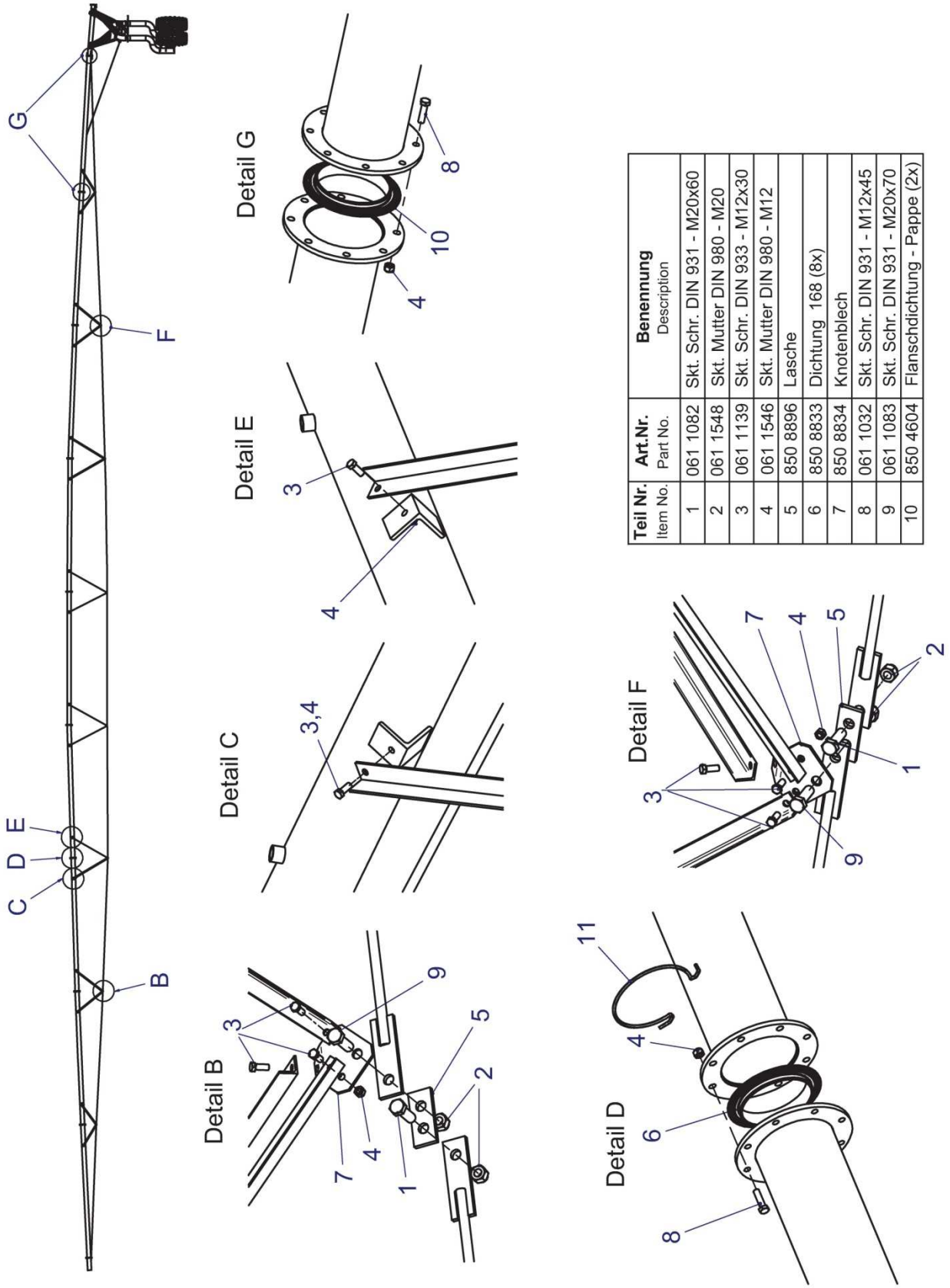

Teil Nr. Item No.	Art.Nr. Part No.	Benennung Description
1	061 1082	Skt. Schr. DIN 931 - M20x60
2	061 1548	Skt. Mutter DIN 980 - M20
3	061 1139	Skt. Schr. DIN 933 - M12x30
4	061 1546	Skt. Mutter DIN 980 - M12
5	850 8896	Lasche
6	850 8833	Dichtung 168 (8x)
7	850 8834	Knotenblech
8	061 1032	Skt. Schr. DIN 931 - M12x45
9	061 1083	Skt. Schr. DIN 931 - M20x70
10	850 4604	Flanschdichtung - Pappe (2x)

10.6.8 CORNER SPAN 55,5 M

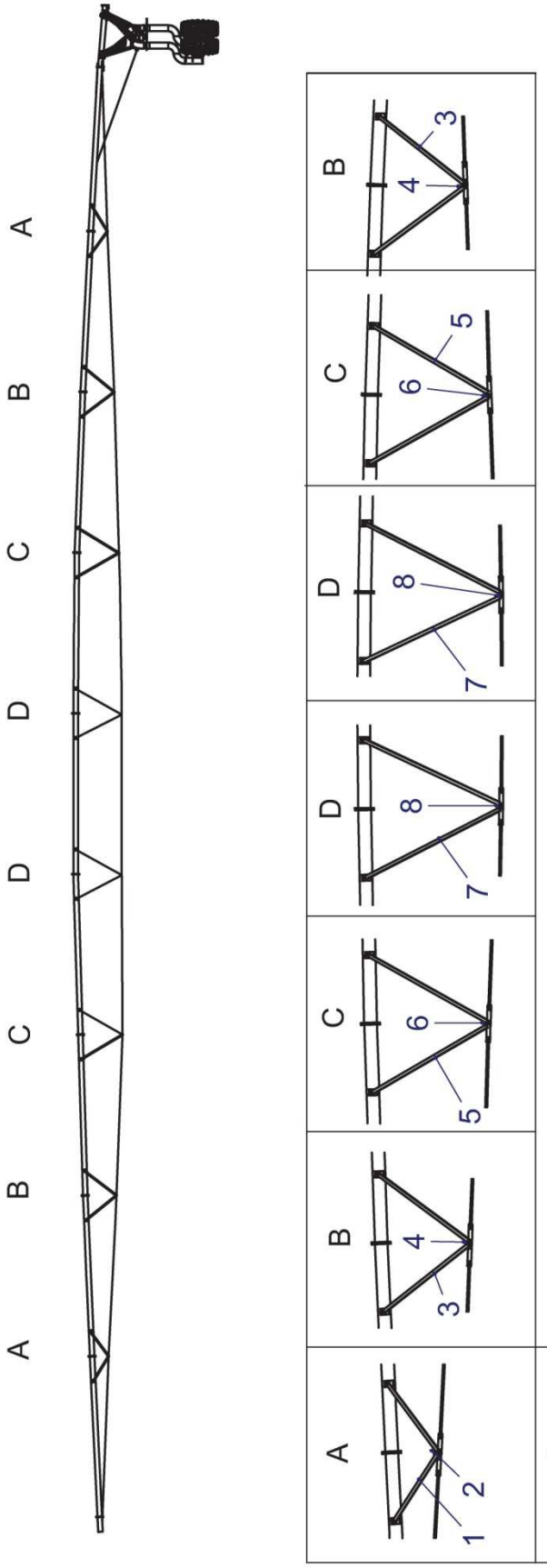

Streben-winkel Truss brace	Art.Nr. Part No.	Länge Length (mm)	Stk/Paket Pieces/ package	Winkel Paket Nr. Brace package	Paket Art. Nr. Package Part No.
1	851 6630	1248	4	A	851 6660
2 *	851 6631	1280	1		
3	851 6632	1778	4	B	851 6661
4 *	851 6633	2149	1		
5	850 8915	2217	4	C	850 8932
6 *	850 8916	2790	1		
7	850 8917	2513	4	D	850 8933
8 *	850 8918	3210	1		

* horizontal
horicontal

10.6.9 CORNER OVERHANG 23,4 M

Bild Fig. Rep.	Bestell-Nr. Part. No. Reference	Benenung Description Designation	Stück quant. pces.
1	851 5660	Überhangrohr 133 / Overhang Pipe 133	4
2	850 6951	Überhangstrebe / Overhang Truss	2
3	850 6952	Querstrebe / Nameplate Support	1
5	851 5611	Konsole L / Bracket L	1
6	850 3580	Seilhalter R / Cable Holder R	2
7	850 3581	Seilhalter L / Cable Holder L	2
8	850 1518	Seilhalter 1 / Cable Holder 1	6
9	850 5218	Flanschdichtung / Flange Gasket	5
(10)	851 5615	Endflansch / End Flange	1
11	850 3579	Seilhalter / Cable Holder	2
12	850 4695	Werbetafel / Sign - Bauer	1
(13)	061 3388	Stopfen / Plug 2"	1
14	851 5601	Kragarmstrebe 1 kpl. / Overhang Cable 1	2
15	851 5605	Kragarmstrebe 5 kpl. / Overhang Cable 5	2
16	851 9327	Abspannseil f. Corner / Overhang Side Support Cable f. Corner System	2
17	850 6958	Seil kpl. / Overhang Spreader Cable	1
18	851 5602	Kragarmstrebe 2 kpl. / Overhang Cable 2	2
19	851 5603	Kragarmstrebe 3 kpl. / Overhang Cable 3	2
20	851 5604	Kragarmstrebe 4 kpl. / Overhang Cable 4	2
21	061 1058	Schraube / Bolt DIN 933 - M16 x 50	14
23	061 1142	Schraube / Bolt DIN 933 - M12 x 40	24
24	061 1139	Schraube / Bolt DIN 933 - M12 x 30	9
25	061 1140	Schraube / Bolt DIN 933 - M12 x 60	16
26	061 1546	Mutter / Nut DIN 980 - M12	49
27	061 1544	Mutter / Nut DIN 980 - M16	18
28	061 2135	Scheibe / Washer DIN 440 - R14	23
30	061 2136	Scheibe / Washer DIN 440 - R17,5	10
31	850 4697	Lasche / Plate	2
32	061 2014	Scheibe / Washer DIN 125 - A17	16
34	851 5610	Konsole R / Bracket R	1
35	061 8995	Kette / Chain	6
36	061 9109	Schäkel / Shackle	6
(37)	851 3454	Flansch kpl. / Flange complete	1
(38)	850 4604	Dichtung / Gasket	1
40	061 1573	Mutter / Nut DIN 934 - M16	10
41	850 3596	Abspannseil f. Corner kurz / bracing cable short	2
42	850 3597	Abspannseil f. Corner lang / bracing cable long	2
43	851 8041	Lasche / plate	4
44	061 1151	Schraube / Bolt DIN 933 - M16 x 60	6
45	061 1083	Schraube / Bolt DIN 931 - M20 x 70	2
(46)	061 1548	Mutter / Nut DIN 985 - M20	(2)

10.6.10 CORNER OVERHANG 23,4 M

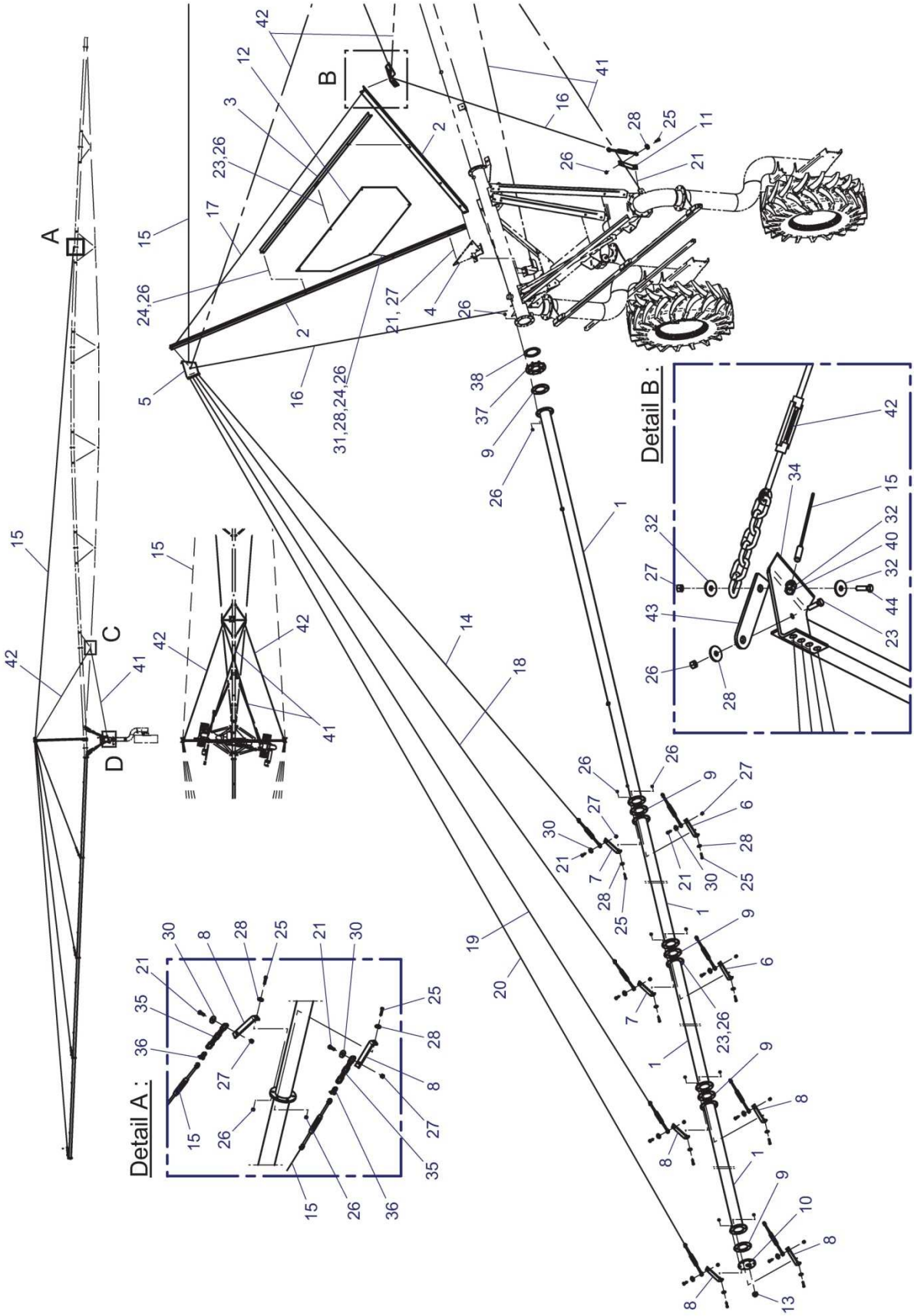

10.6.11 CORNER OVERHANG 23,4 M

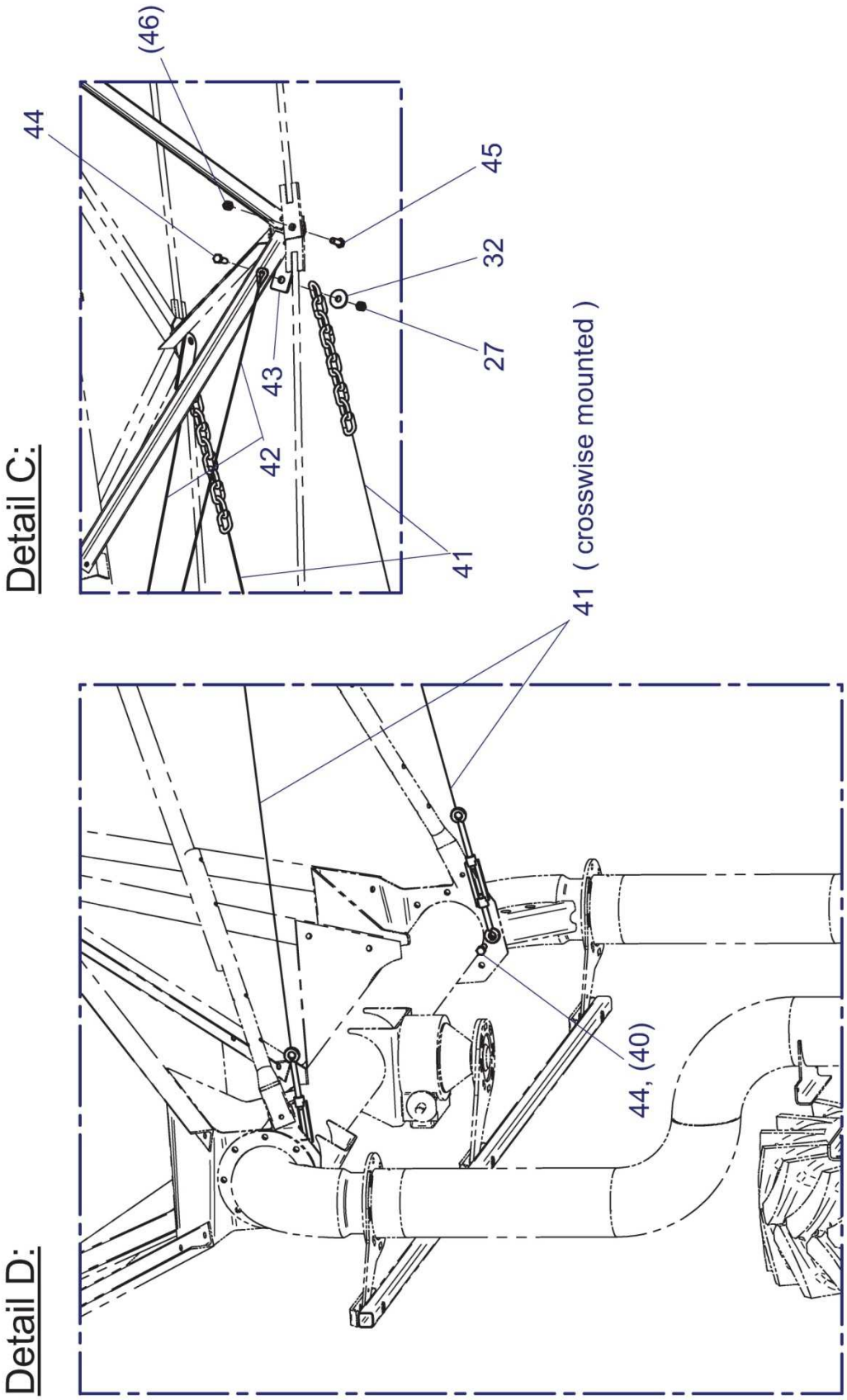

10.6.12 CORNER DRIVE TOWER

1	851 9341	Radträger Corner kpl / wheel base corner	2
2	851 9340	Distanzplatte / spacer plate	4
3	062 9488	Kupplung / driveline coupler -HT 1,125x1" *(after Aug. 2011 use Nr.4!)*	2
4	062 9480	Kupplung / driveline coupler -high torque	4
5	851 9342	Antriebswelle kurz f. Corner / drive shaft short	2
6	851 9377	Antriebswelle lang f. Corner / drive shaft long	1
7	062 9485	Schutzglocke / bell shield	6
8	062 9486	Schutzrohr / shield	1
9	062 5153	Schelle / hose clamp DIN3017 035-050/12	6
10	851 9330	Führung Corner / guidance	2
11	851 9344	Lenkhebel / side steering lever	2
12	851 9345	Lenkhebel Mitte / center steering lever	1
13	851 9313	Lenkstange kpl. / steering bar	1
14	087 9630	Lenksensor / antenna HG 19536XA	2
15	851 9328	Konsole f. Antenne / bracket f. antenna	2
16	851 9335	Antennenträger / antenna mouting	1
17	851 9317	Querrohr Kpl. / cross tube	1
18	851 9348	Fahrturmwinkel 1 Corner / driver tower angle 1	2
19	851 9349	Fahrturmwinkel 2 Corner / driver tower angle 2	2
20	851 9350	Fahrturmwinkel 3 Corner / driver tower angle 3	2
21	851 9351	Fahrturmwinkel 4 Corner / driver tower angle 4	2
22	851 9352	Fahrturmstrebe 1 Corner / drive tower support 1	1
23	851 9353	Fahrturmstrebe 3 Corner / drive tower support 3	1
24	851 0541	Fahrturmstrebe 2 / drive tower support 2	2
25	851 9295	Schellenhälfte 1 geschw. / Clamp 1	1
26	851 6644	Schellenhälfte 2 / Clamp 2	1
28	851 9343	Bolzen f. Kugel / bolt	2
29	850 6471	Kugel / ball	2
31	061 5722	Spannstift / Lock pin DIN 1481 - 5x55 A2	3
32	061 2016	Scheibe / washer DIN125 - A21	12
33	851 9294	Bolzen / Pin	3
34	061 1548	Mutter / hex. lock nut DIN985 - M20	2
35	061 0157	Schraube / bolt DIN84 - M4 x 40	8
36	061 2000	Scheibe / washer DIN125 - A4,3 - A4	8
37	061 1541	Mutter / hex. nut DIN934 - M4	8
38	061 1179	Schraube / hex. bolt DIN933 - M10 x 70	2
39	061 2216	Federring / lock washer DIN127 - B10	2
40	061 2007	Scheibe / washer DIN125 -A10,5	4
41	061 1198	Schraube / hex. bolt UNC 1/2" x 1 3/4 "	10
42	061 1563	Mutter / hex. nut DIN934 - M10	14
43	061 1007	Schraube / hex. bolt DIN931 - M8 x 70	2
44	061 1510	Mutter / hex. nut DIN934 - M8	8
45	061 2005	Scheibe / washer DIN125 - A8,4	16
46	061 1199	Schraube / hex. bolt UNC 1/2" x 1"	7
47	061 1126	Schraube / hex. bolt DIN933 - M10 x 35	12
48	061 1058	Schraube / hex. bolt DIN933 - M16 x 50	24
50	061 1573	Mutter / hex. nut DIN934 - M16	26
51	061 1151	Schraube / hex. bolt DIN933 - M16 x 60	2
52	061 1059	Schraube / hex. bolt DIN933 - M16 x 40	32
53	061 1544	Mutter / hex. nut DIN980 - M16	32
54	061 9050	Knotenkette / chain DIN5686 - 2,5	1,2
55	018 8166	Klemme / clip	6
56	061 1081	Schraube / hex. bolt DIN933 - M20 x 50	2

10.6.13 CORNER DRIVE TOWER

Bild Fig. Rep.	Bestell-Nr. Part. No. Reference	Benenung Description Designation	Stück quant. pces.
57	061 1032	Schraube / hex. bolt DIN931 - M12 x 45	6
58	061 1546	Mutter / hex. nut DIN980 - M12	30
59	061 1016	Schraube / hex. bolt DIN931 - M8 x 60	6
60	061 1162	Schraube / hex. bolt DIN933 - M12 x 80	4
61	061 3238	Rohrdoppelnippel / double nipple 3/4" x 160	1
62	061 3315	Muffe / socket 3/4" - NR270	1
63	851 9161	Halteblech geschw. / Clamp for mounting	2
64	851 9163	Winkel f. Podest / Angle bracket	2
65	851 9166	Gitter / Grid 1000x800	1
66	851 8186	Schellenhälfte / Clamp	6
67	851 9164	Aufstiegshilfe / Bracket	3
68	851 9165	Trittblech / Tread plate	3
69	061 0295	Senkschraube / Countersunk bolt DIN 7991- M 6 X 20	6
70	061 1551	Mutter / Nut DIN 980 - M6	6
71	061 1142	Schraube / Hex. bolt DIN 933 - M12 x 40	16
72	061 1127	Schraube / Hex. Bolt DIN 933 - M12x35	4
73	087 2063	Kabel-Durchführungstülle	2
(75)	850 4178	Radgetriebe / Gearbox 760 U	2
(76)	062 9347	Antriebsmotor / Gearmotor 1,5 HP, i=30:1	2
(77)	850 4188	Radgetriebe / Gearbox 740 U	1
(78)	062 9320	Antriebsmotor / Gearmotor 0,75 HP, i=60:1	1
		( ) nicht enthalten in / not included in 851 9399	

10.6.14 CORNER DRIVE TOWER

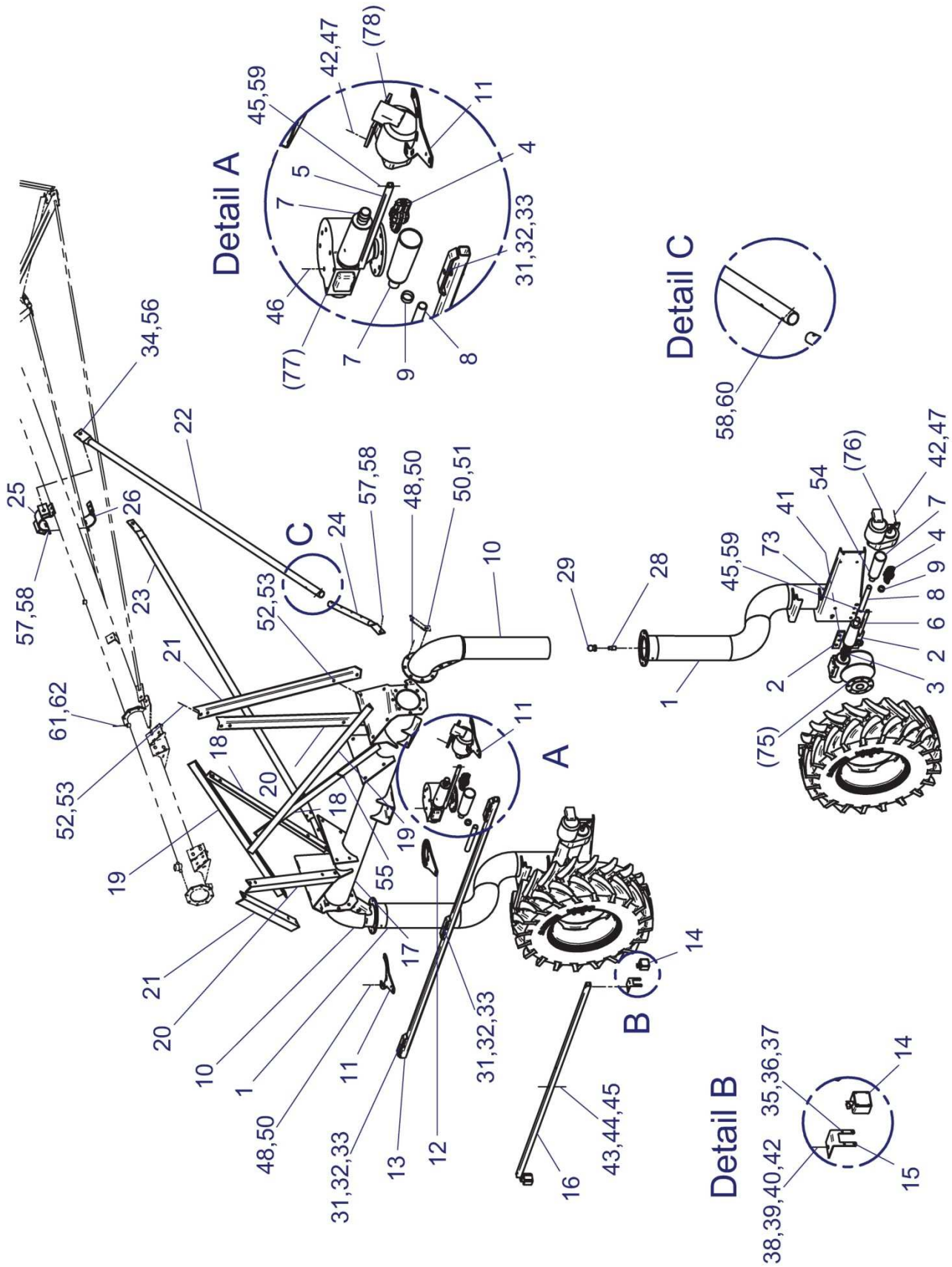

10.6.15 CORNER DRIVE TOWER

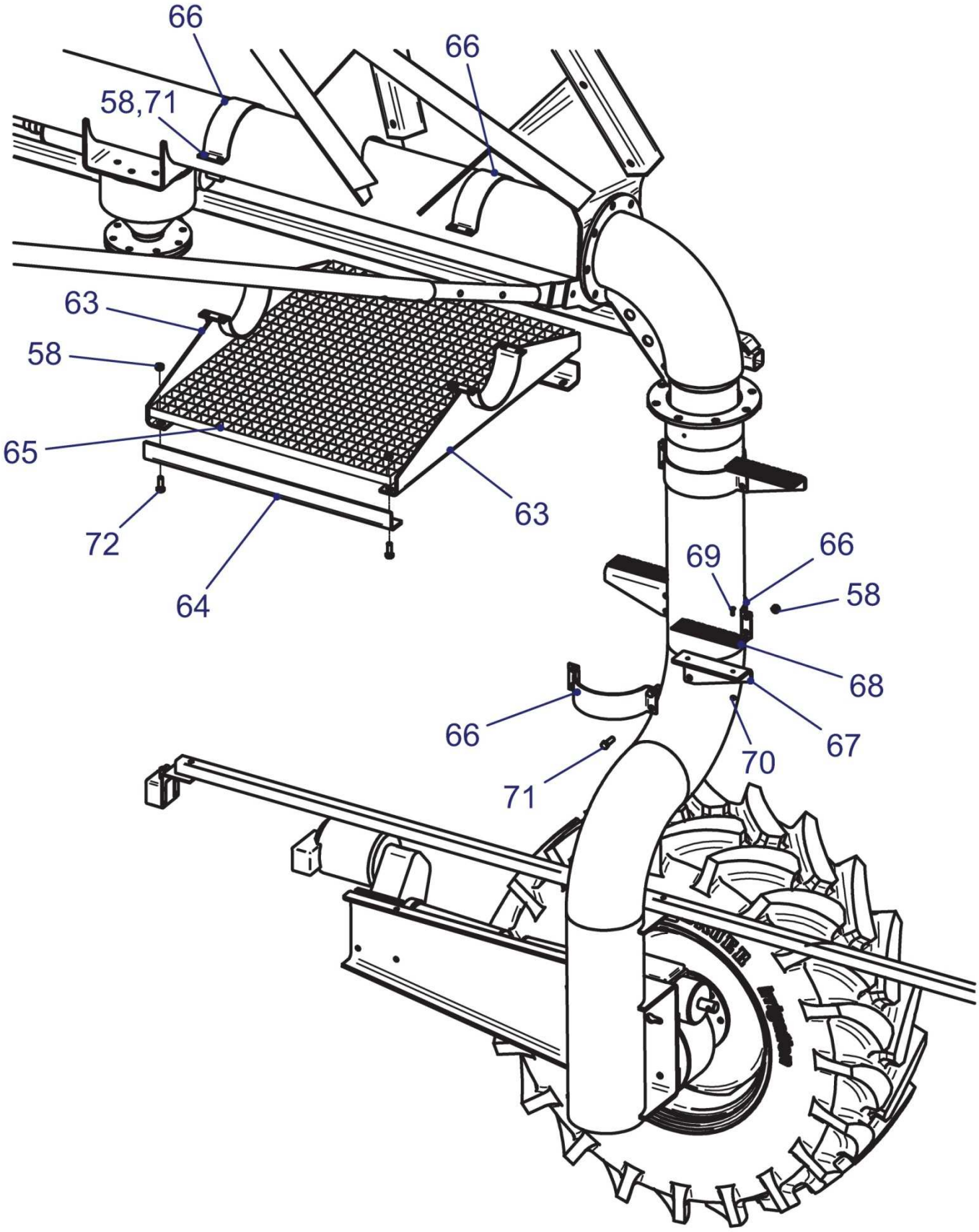

11 ASSEMBLY OF THE SYSTEM

11.1 GENERAL INSTRUCTIONS

The BAUER CORNER SYSTEM, and the truss structure in particular, differs only slightly from a CENTERSTAR. For this reason, also carefully read the separate *assembly manual* of the CENTERSTAR.

If you purchased the BAUER CORNER SYSTEM for retrofitting, also carefully follow the instructions in the section ASSEMBLY OF THE SYSTEM AS A RETROFIT below.

WARNING: For the assembly and installation of the underground control of the CORNER SYSTEM, please make use of the separate *CABLE INSTALLATION MANUAL for the BAUER CORNER SYSTEM*.

Please note that the following instructions are intended as an aid to assembly of a CORNER SYSTEM. Only the important assembly steps and configuration work are addressed in particular detail. Extensive experience in pivot system assembly is therefore essential for successful assembly of a CORNER SYSTEM. As an aid during the assembly, please consult the *CORNER SYSTEM SPARE PARTS LIST*.

11.2 END SPAN

Mount the last span of the pivot as for a CENTERSTAR (see CENTERSTAR assembly manual). In place of the *overhang end pipe* / *end pipe 2* (*CENTERSTAR*), use the ***CORNER END PIPE 2*** - *851 9311*. Close the truss structure here with the ***END FLANGE WITH SOCKET*** - *850 4652* (WARNING: A paper gasket is used for the end flange)**.** Mount the ball (position 3) as shown.

WARNING: Parts of the *angle sensor tower box* are screwed to the *end flange*. See here *11.3 ANGLE SENSOR TOWER BOX*.

WARNING: On *end span* / *end tower* use the ***shielded motor cable*** - *850 0636*.

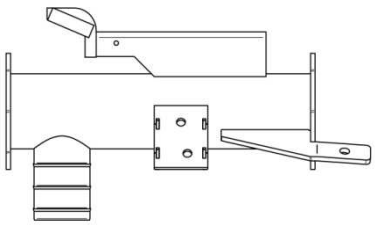

ENDROHR 2 CORNER / endpipe 2 f. Corner
851 9311

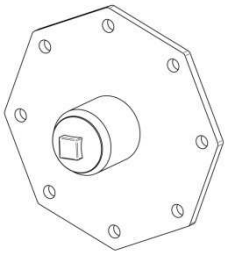

ENDFLANSCH MIT MUFFE / endflange w. socket
850 4652

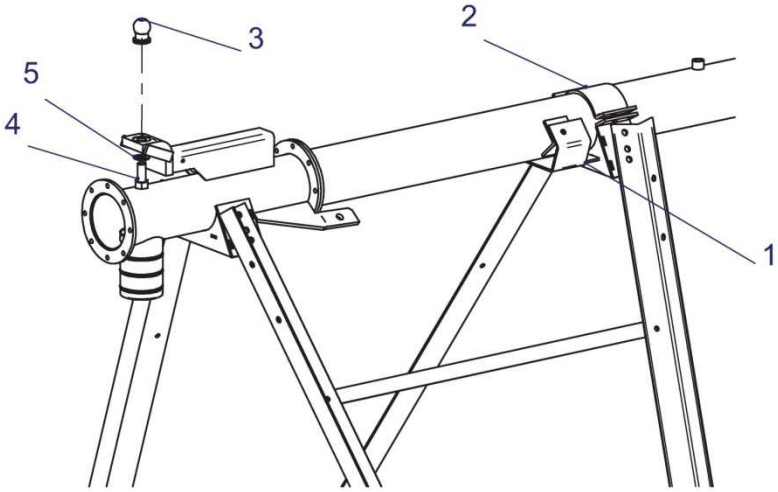

Teil Nr. Item No.	Art.Nr. Part No.	Benennung Description
1	851 6640	Konsole / Bracket
2	851 6644	Schellenoberteil / Clamp Top Part
3	850 6471	Kugel / Ball
4	061 1164	Schraube / Screw M24 x 55 - DIN 933
5	061 2015	Scheibe / Washer DIN 125 - A25

11.3 ANGLE SENSOR TOWER BOX

Screw items ***3*** and ***4*** together as shown and mount this to the ***END FLANGE***. Connect the tower box (**12**) itself as well as ***2*** + ***5*** as shown. The parts can only be mounted after coupling the *CORNER SPAN* with the *PIVOT* at component ***4***.

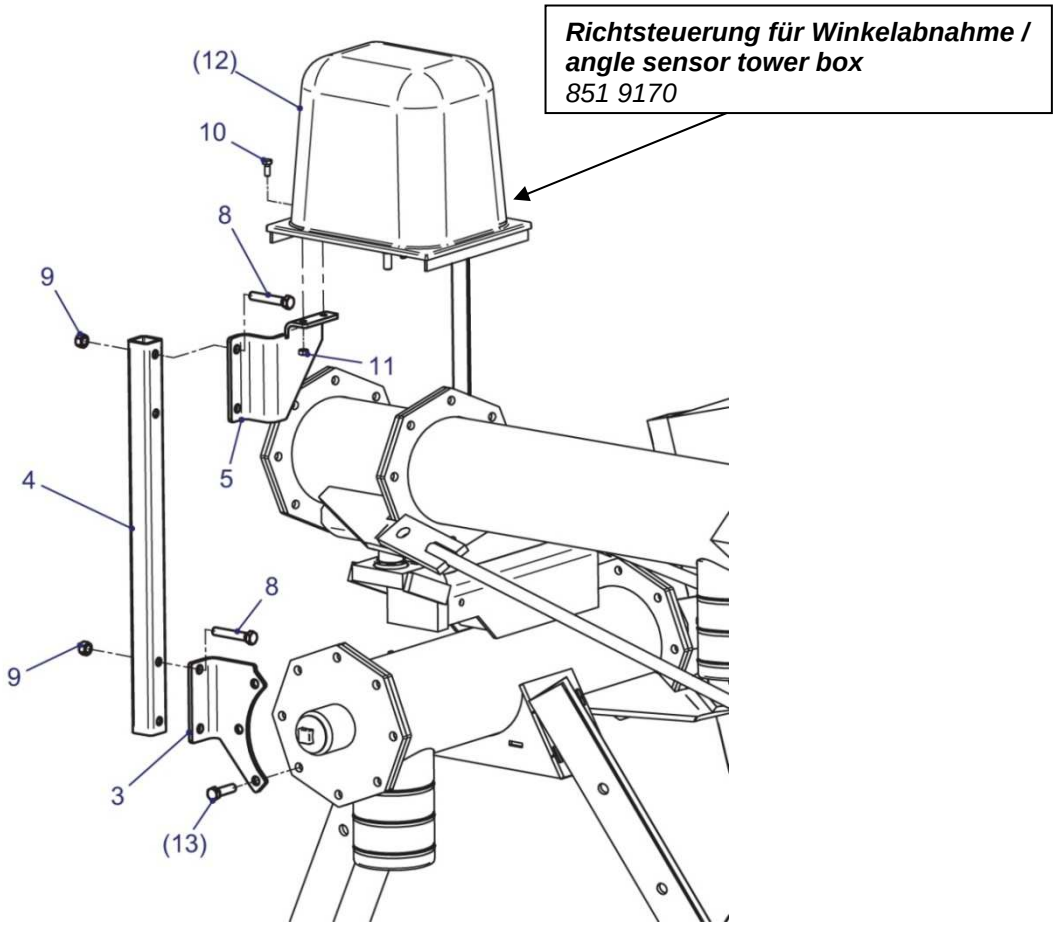

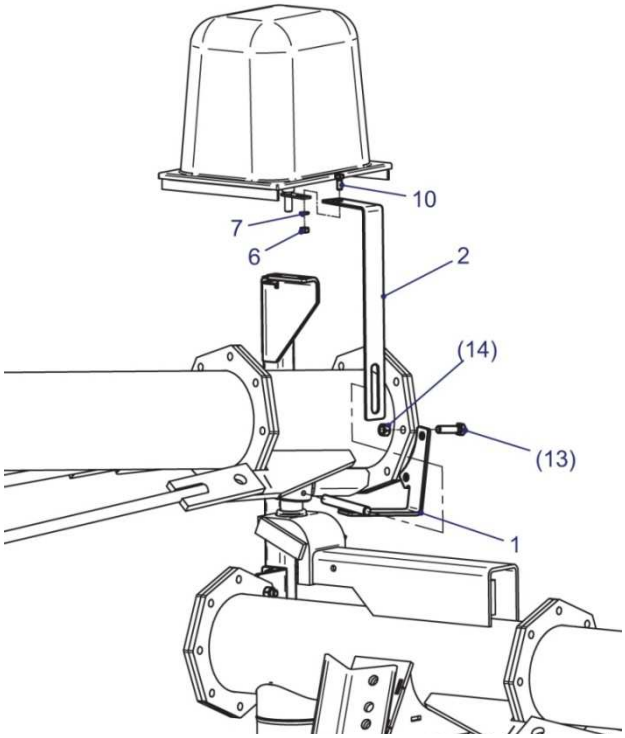

ANGLE SENSOR TOWER BOX

WARNING: To protect the electronic parts during transport, ***gear wheel 2*** *(item 2)* is delivered uninstalled. During assembly, this must be installed as shown below. The two gear wheels must run without play.

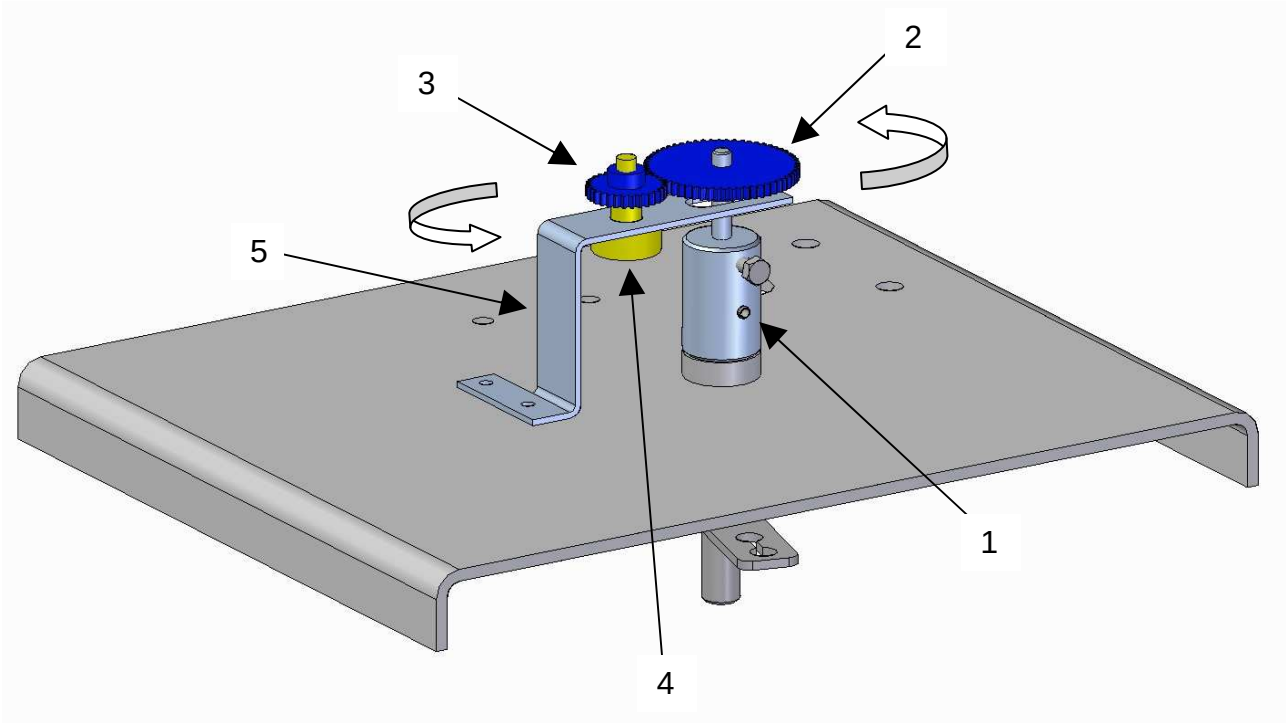

Make sure that the sensor is not moved against its mechanical limit while the CORNER span swings outward or inward. There is a transmission ratio of i = 2 between the gear wheels, meaning that if the CORNER span moves by 90°, the sensor will turn 180°.

WARNING: The sensor allows a maximum rotation of ***0° to 360°*** and is limited by a mechanical stop. Never attempt to turn the sensor past this range with force.

You can change the position of **gear wheel *2*** in a vertical direction by loosening the screw on **adapter sleeve *1***. **Gear wheel *2*** can then be moved up or down. Make sure that the two gear wheels are aligned over their entire width. Otherwise, early wear or slipping of the opposing gear could occur.

Connect the tower box ***12*** with the *cable* (*3 x 1.5²*) according to ***circuit diagram 018 8261*** (*corner poti / angle measurements).* The tower box will later be connected to the ***CORNER END TOWER control cabinet*** (*see 11.4)*. For this reason, adjust the **cable length** accordingly.

11.4 PNEUMATIC COMPRESSOR

First screw the compressor (28) to the add-on parts *4, 5, 6, 7* and *8*. Next, mount the cover *9*. Then affix the edge protection *27* to the cover *9*. The clamp top elements *1* and *3* must then be fastened to *4* and *5*.
Position the preassembled component as far as possible to the right on the *END SPAN* and screw this to the clamp bottom elements *2*. The remaining space is required for the *CORNER END TOWER* control box.

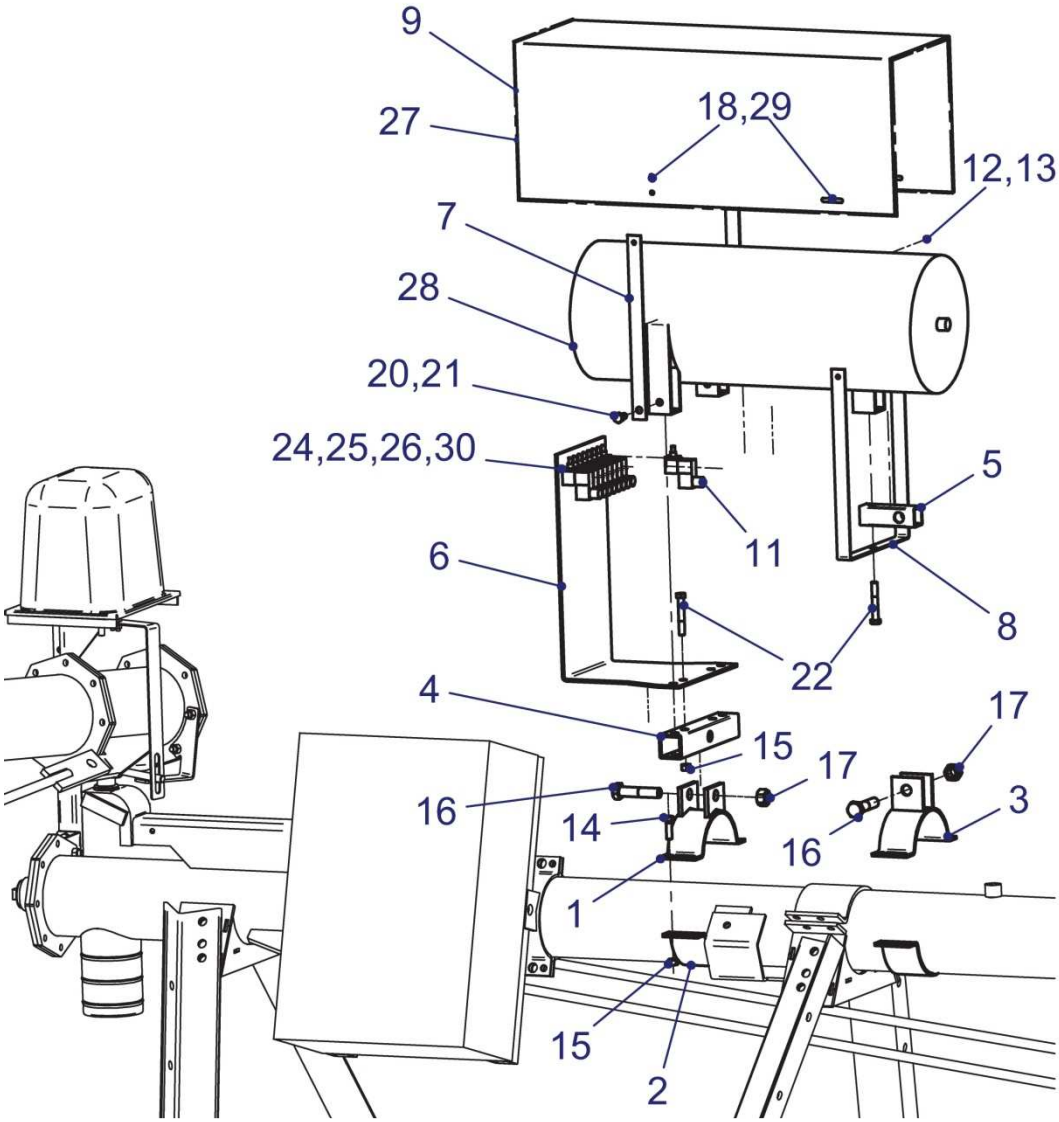

Connect the pneumatic control valves (9x) to the respective cable (3 x 0.75²) according to the *circuit diagram 018 8261* (irrigation valves). The pneumatic control valves will later be connected to the *CORNER END TOWER control cabinet* (image above). For this reason, adjust the cable length accordingly.
Now mount the pneumatic control valves to the bracket *6.*

CORNER END TOWER CONTROL UNIT CIRCUIT DIAGRAM

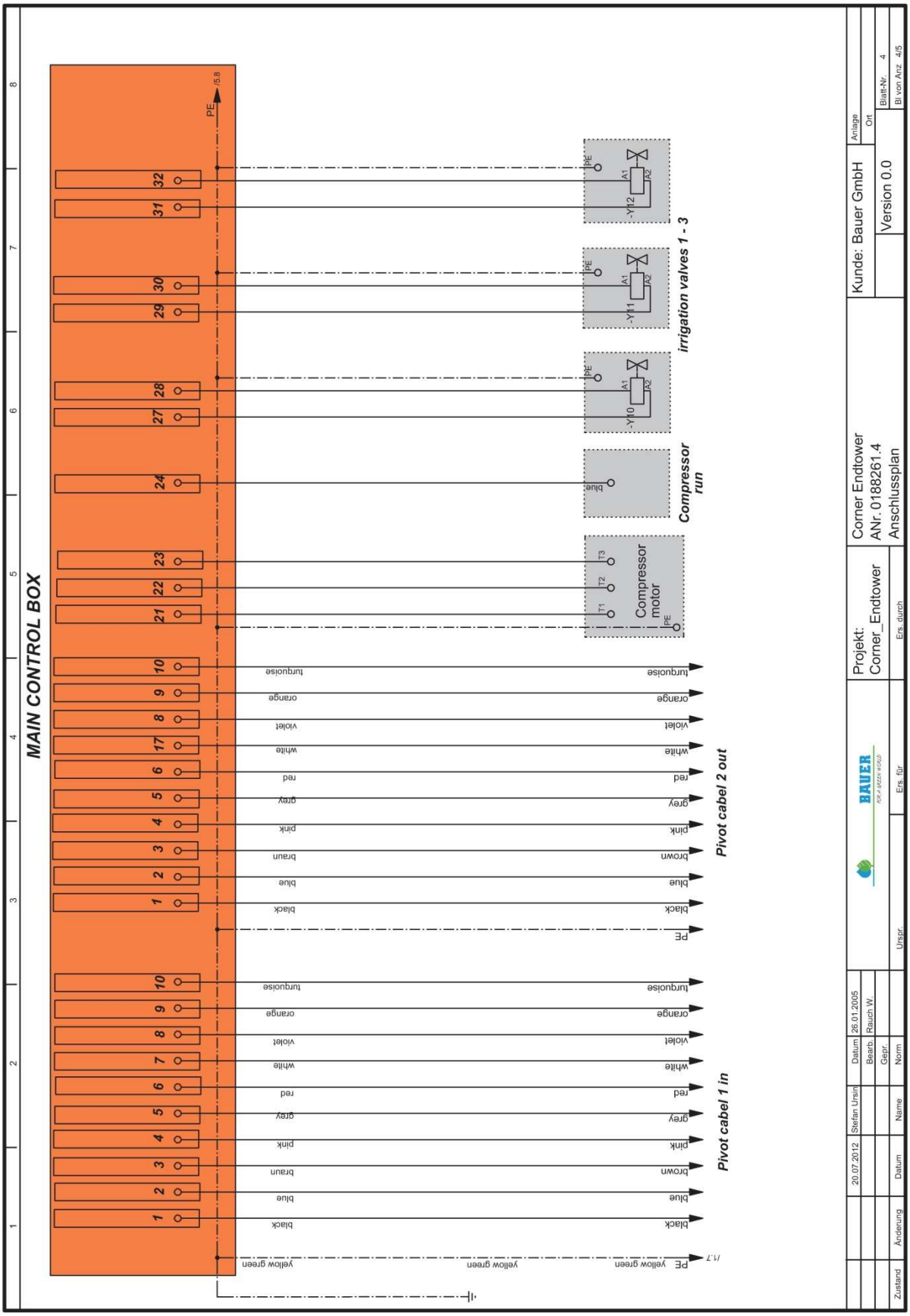

CORNER END TOWER CONTROL UNIT CIRCUIT DIAGRAM

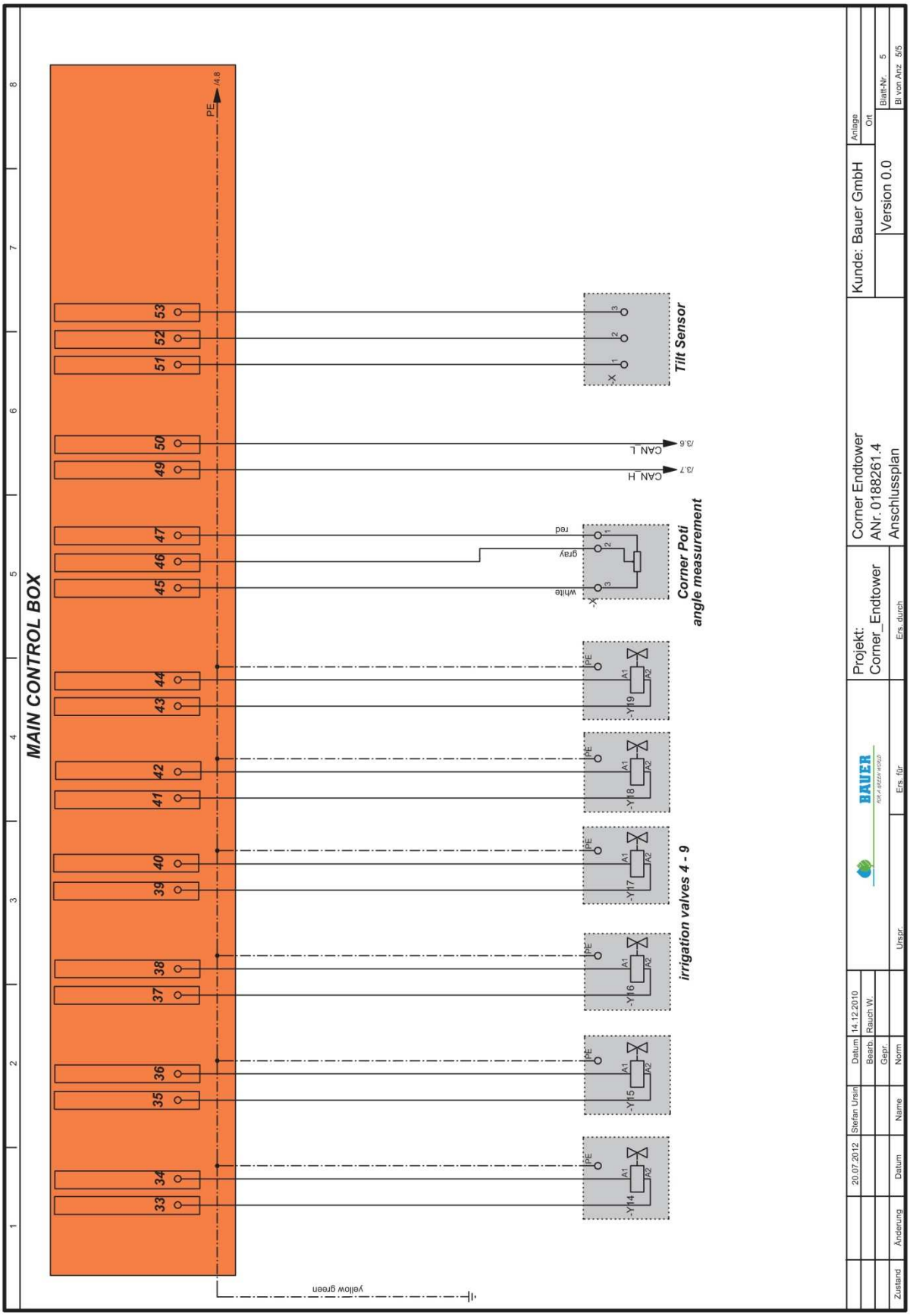

11.5 CORNER SPAN

The *CORNER SPAN* is mounted like a typical truss structure of a *CENTERSTAR*. It differs only in individual parts.

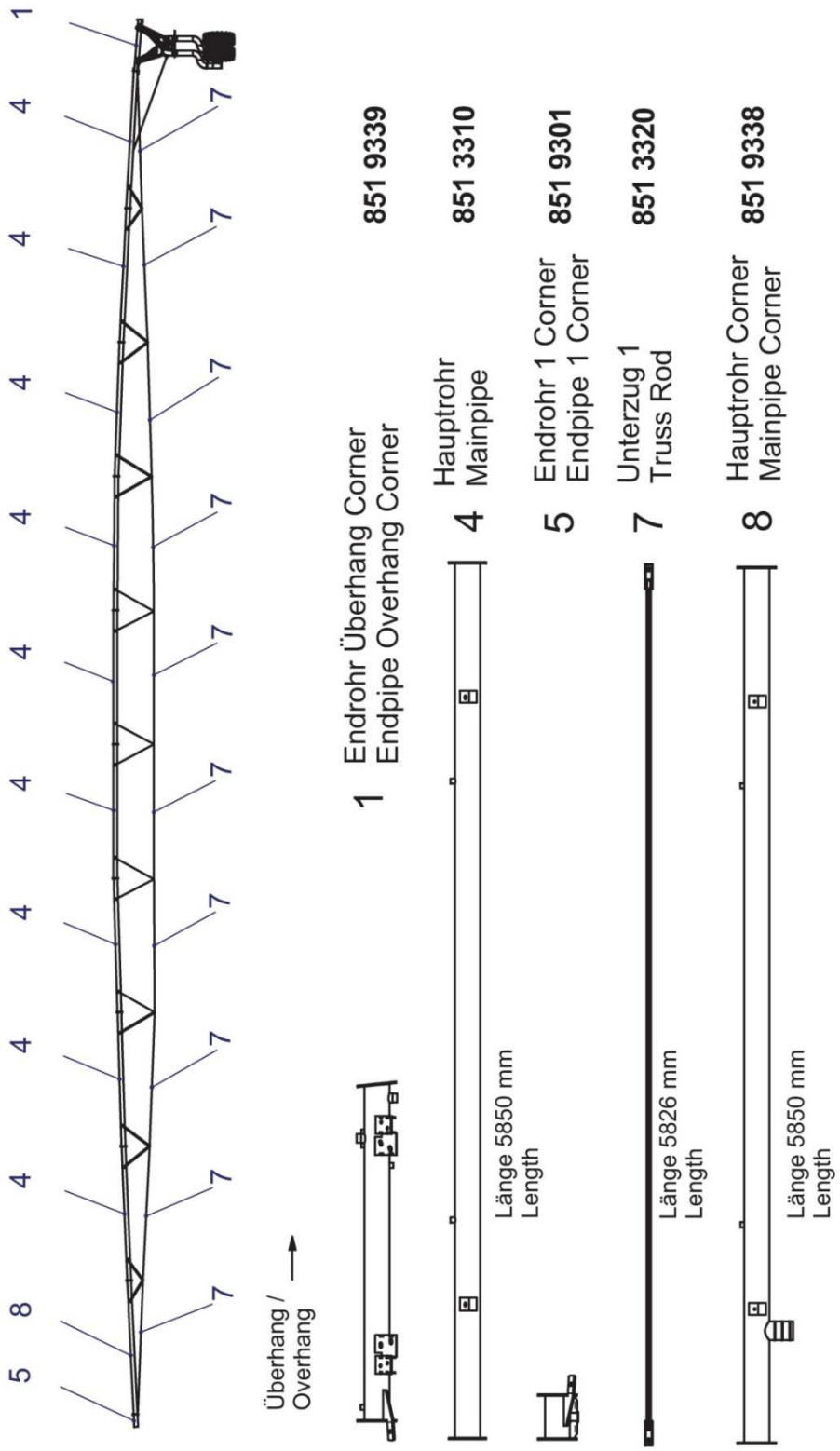

In place of the *end pipe 1* (*CENTERSTAR*), use the ***CORNER END PIPE 1*** - *851 9301*. In place of the first *main pipe*, use the ***corner main pipe*** - *851 9338.* Close the truss structure here with the ***END FLANGE WITH SOCKET*** - *850 4652* (WARNING: A paper gasket is used for the end flange)***.*** The ***corner overhang end pipe*** - *851 9339* is affixed to the last *main pipe*.

WARNING: Also use the **paper gasket** - *850 4604* in place of the rubber gasket at items *G* (2x).

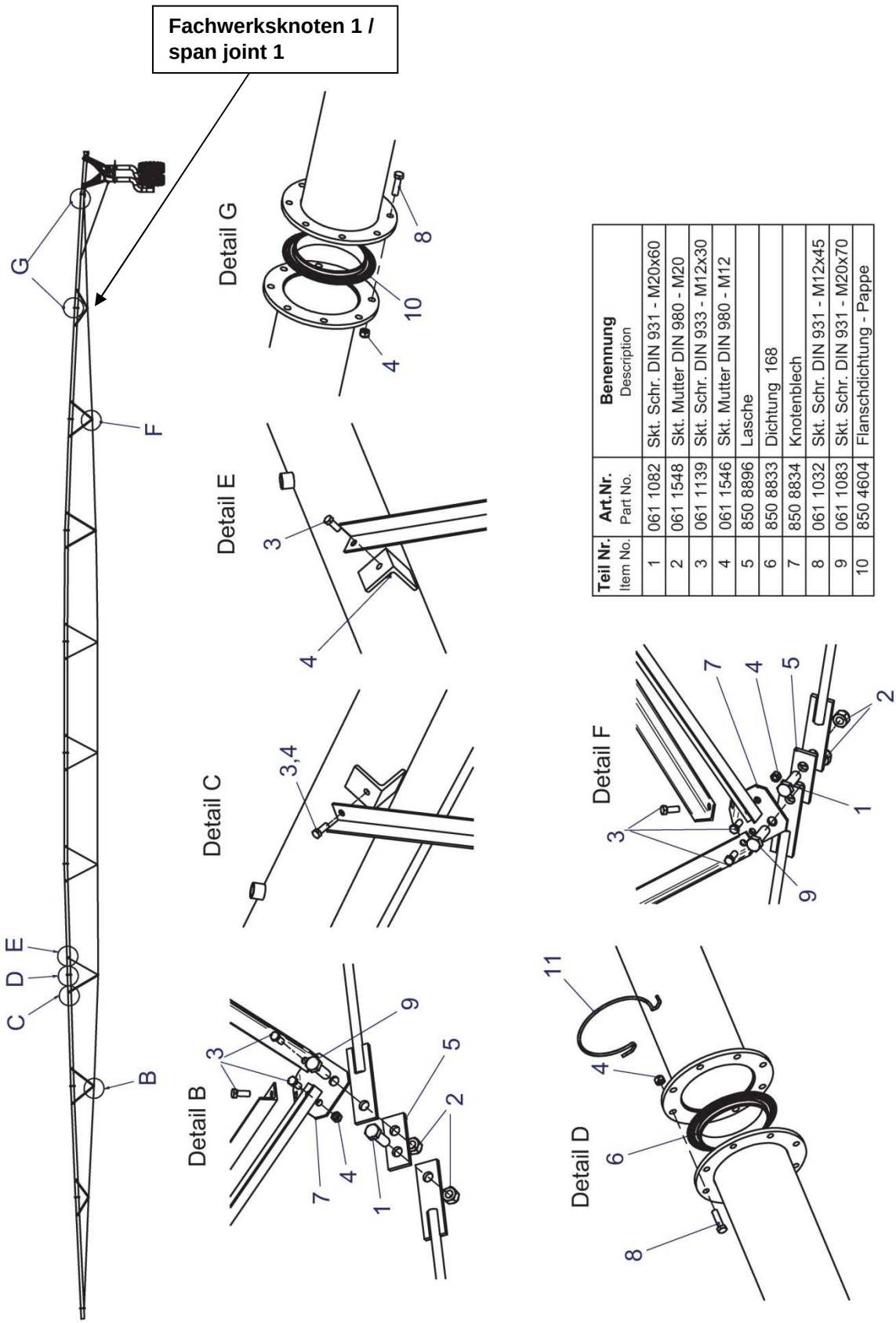

Teil Nr. Item No.	Art.Nr. Part No.	Benennung Description
1	061 1082	Skt. Schr. DIN 931 - M20x60
2	061 1548	Skt. Mutter DIN 980 - M20
3	061 1139	Skt. Schr. DIN 933 - M12x30
4	061 1546	Skt. Mutter DIN 980 - M12
5	850 8896	Lasche
6	850 8833	Dichtung 168
7	850 8834	Knotenblech
8	061 1032	Skt. Schr. DIN 931 - M12x45
9	061 1083	Skt. Schr. DIN 931 - M20x70
10	850 4604	Flanschdichtung - Pappe

Mount the add-on parts of the overhang and drive tower at *SPAN JOINT 1*.

Screw the *plate 43* to the *span joint 1*. Fasten the *cables 42* as shown to the *plate 43*; later, this will be mounted to the overhang cross-piece (see Overhang Assembly). Do not fasten the *cables 41* until the *cross tube* has been mounted (see Corner Drive Tower Assembly). The *cables 41* are later mounted to the corner drive tower.

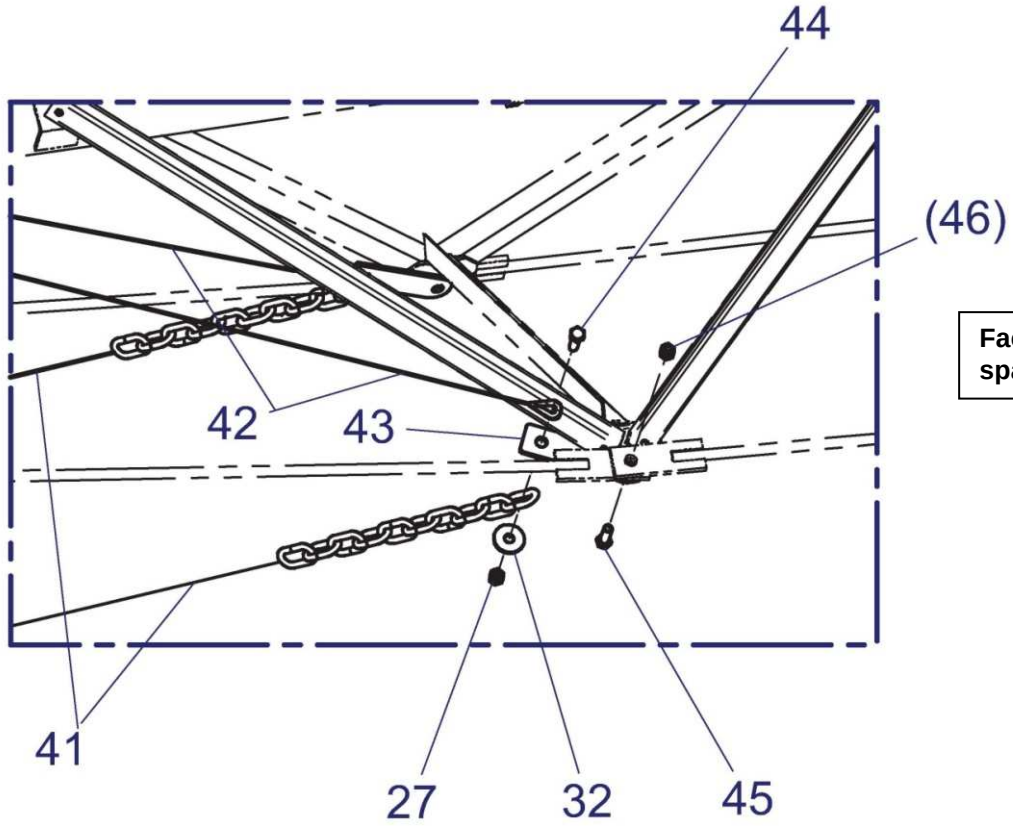

Fachwerksknoten 1 / span joint 1

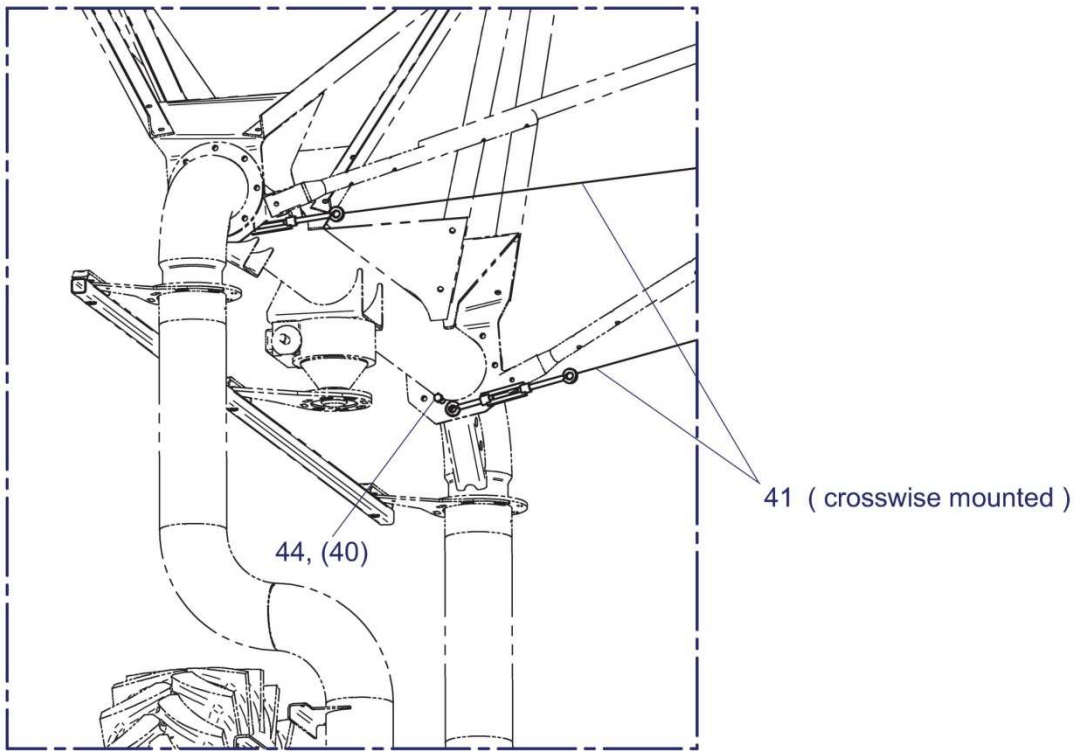

Mount the ***bracket for tower box*** - *851 6653* to the span joint 1 as shown.

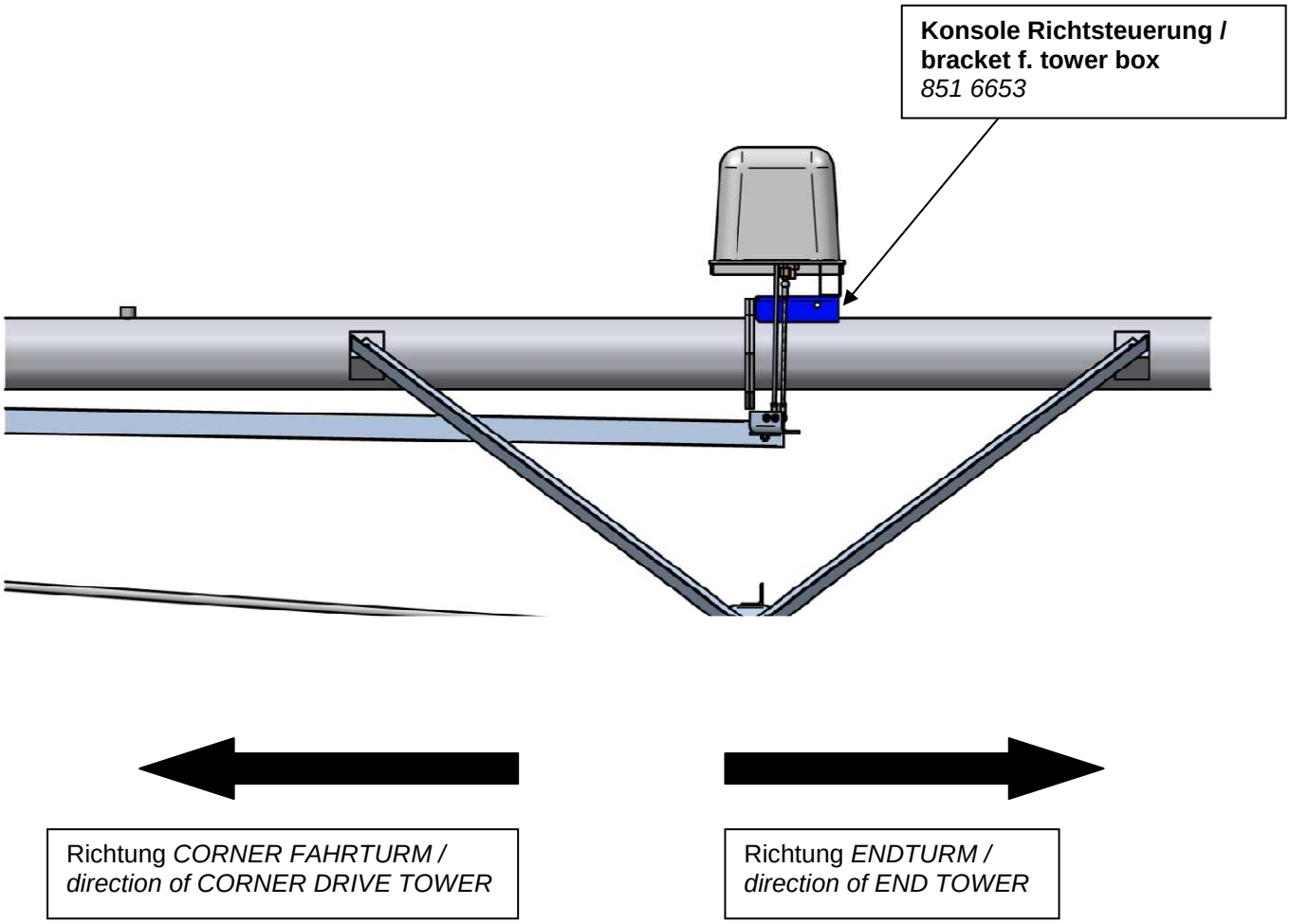

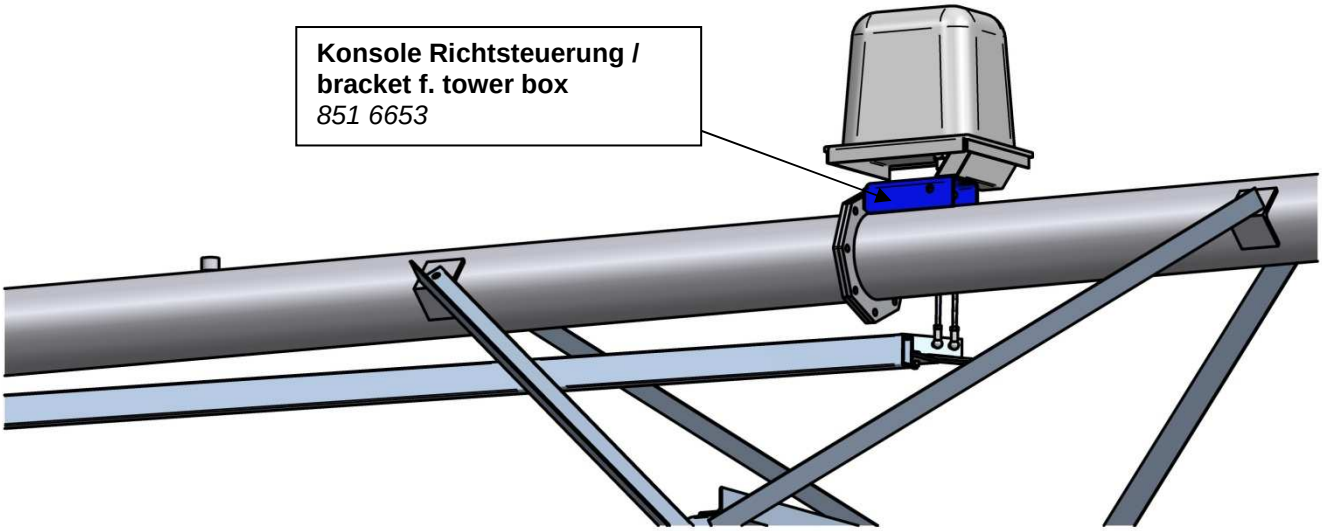

Fasten the ***actuator*** - *851 9167* to the ***end pipe 1 Corner*** - *851 9301*.

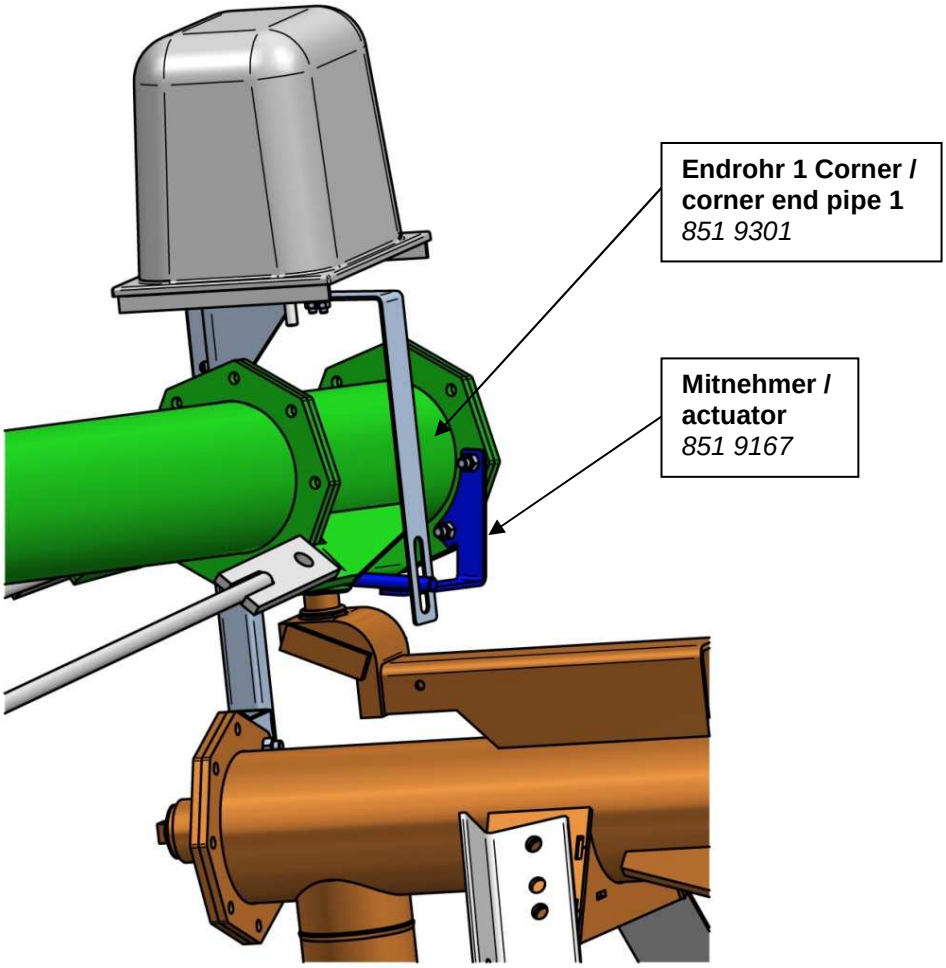

11.6 CORNER OVERHANG

The *CORNER OVERHANG* is mounted like a typical overhang of a *CENTERSTAR*. It differs only in additional, individual parts.

Additionally fasten *plate 43* as shown (see Detail B). Mount the *side support cables 42* to this plate as shown.

WARNING: *Side support cables 41* are mounted crossed over. *Side support cables 42* are NOT mounted crossed over.
Side support cables 41 are mounted to the *drive tower* only after assembly of the *corner shaft guides - 851 9330*.

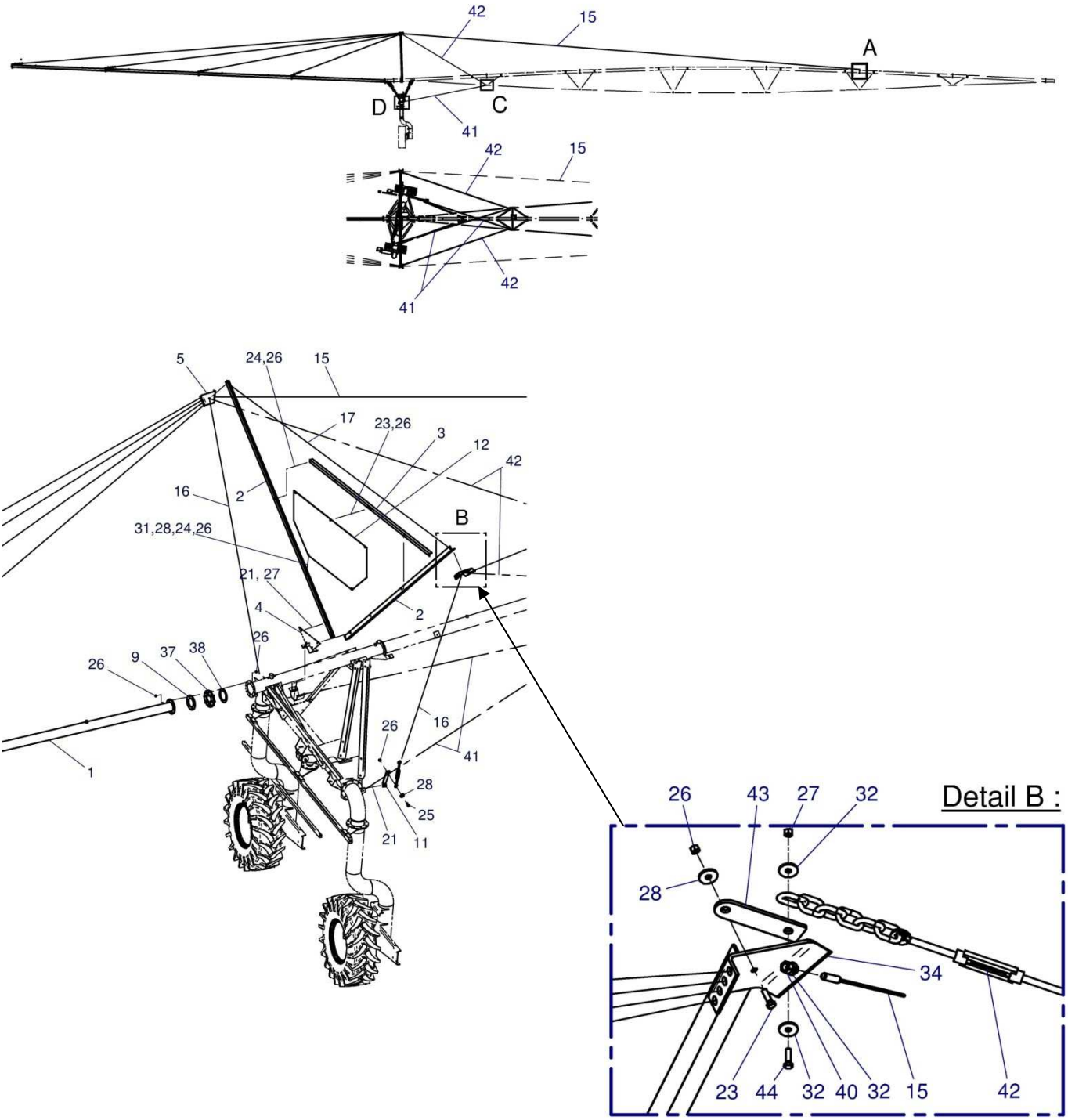

11.7 CORNER DRIVE TOWER

After completing the assembly, lift up the entire truss structure so that you can fasten the *drive tower angles 18, 19, 20* and *21* to the *cross tube 17* as shown below.

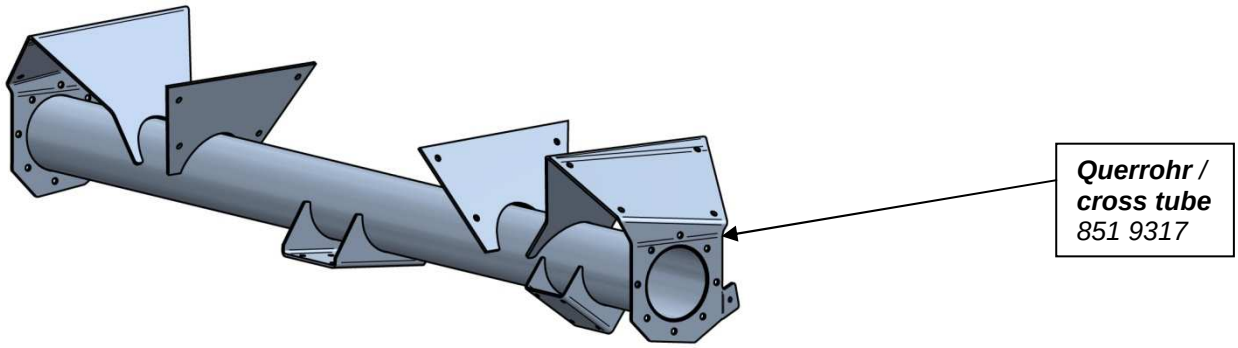

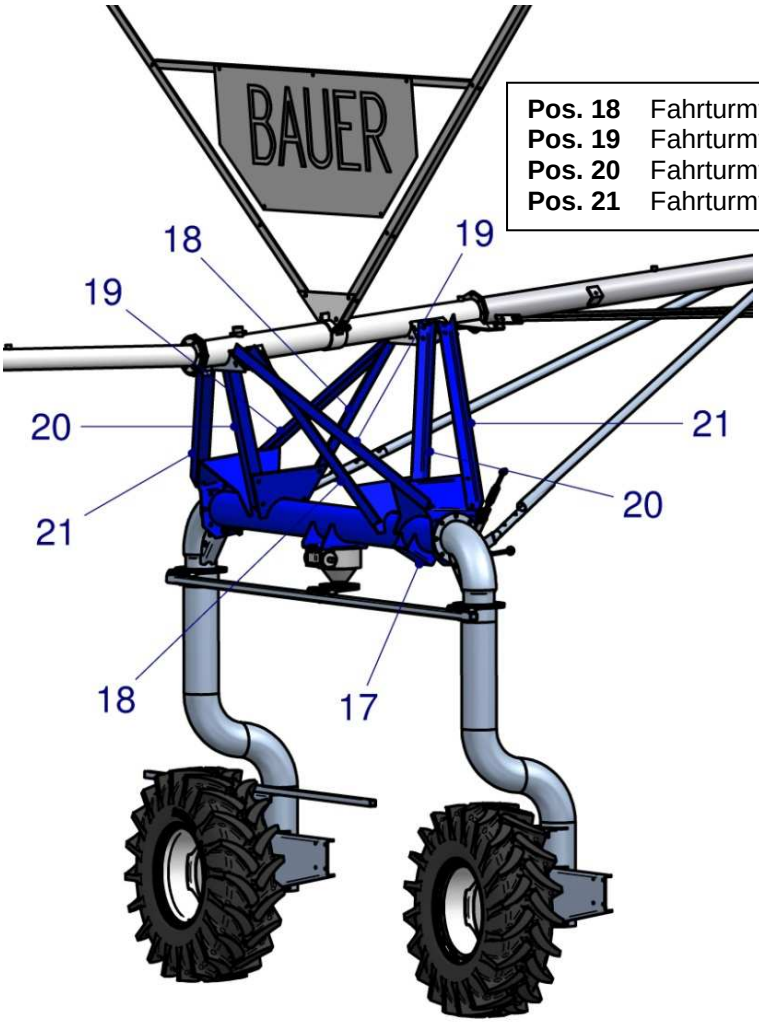

Pos. 18	Fahrturmwinkel / drive tower angle 1 / 1360mm - ***851 9348***
Pos. 19	Fahrturmwinkel / drive tower angle 2 / 1730mm - ***851 9349***
Pos. 20	Fahrturmwinkel / drive tower angle 3 / 1460mm - ***851 9350***
Pos. 21	Fahrturmwinkel / drive tower angle 4 / 1990mm - ***851 9351***

Then fasten the truss structure with the *drive tower supports 22, 23, 24* and the *clamp halves 25 and 26*.

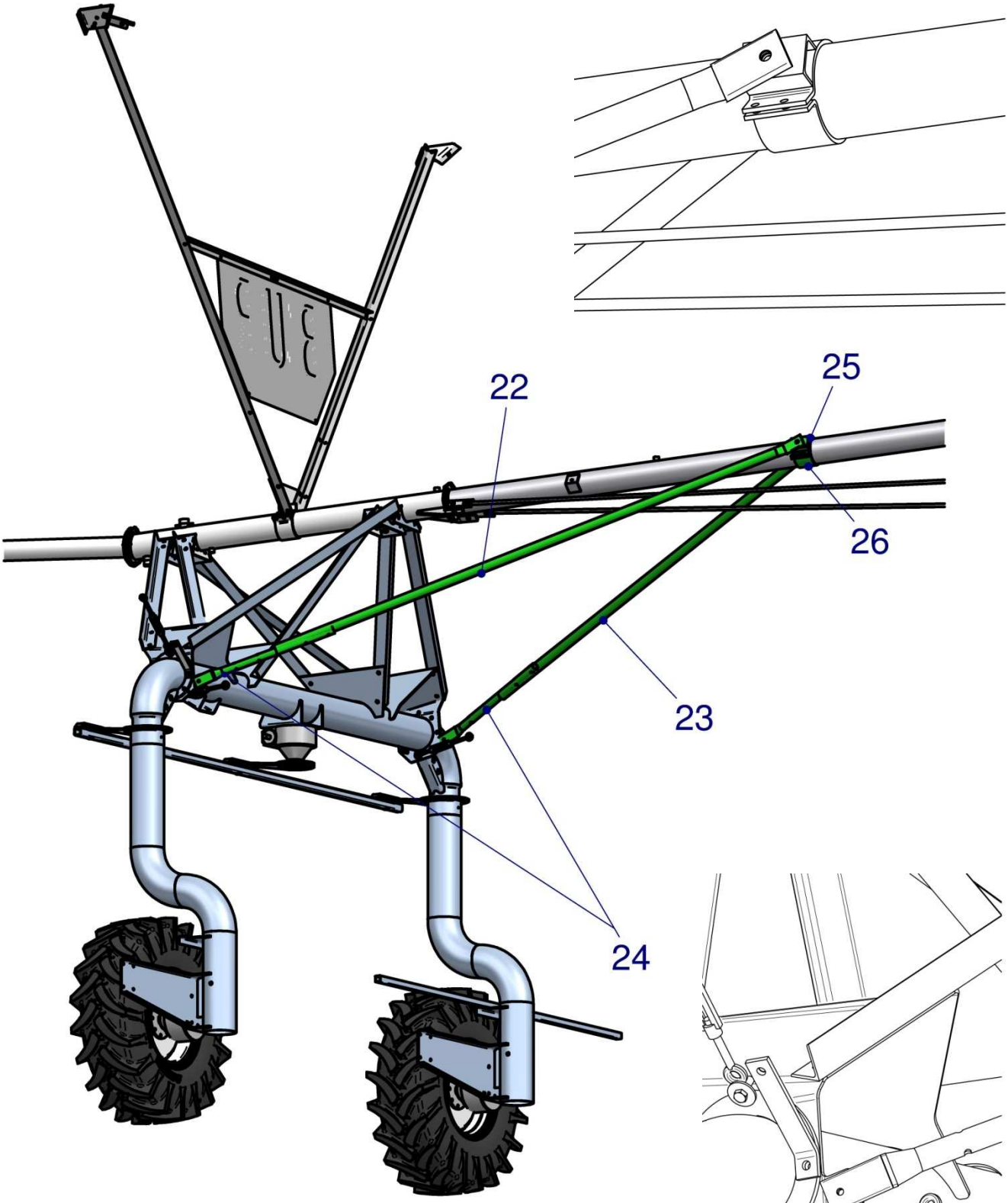

Pos. 22	Fahrturmwinkel / drive tower angle 1 / 3745mm - ***851 9352***
Pos. 23	Fahrturmwinkel / drive tower angle 2 / 3210mm - ***851 9353***
Pos. 25	Schellenhälfte 1 / clamp 1 - ***851 9295***
Pos. 26	Schellenhälfte 2 / clamp 2 - ***851 6644***

11.8 BOOSTER PUMP

Mount the booster pump as for the CENTERSTAR. For more information, please consult the *assembly manual for CENTERSTAR 5000*.

11.9 PE SUPPLY LINE TO ENDGUN / ENDGUN

Mount the PE supply line and endgun as for the CENTERSTAR. For more information, please consult the *assembly manual for CENTERSTAR 5000*.

11.10 NOZZLE PIPES / HYDRAULIC VALVES

Mount the *nozzles pipes* in essentially the same way as for the CENTERSTAR. Also fasten the *hydraulic valve - 063 5283* after the *180° bend* on each nozzle pipe.

NOTE: To be able to mount the hydraulic valve to the *180° bend* , you must first unscrew the fitting for the pneumatic supply line since this would otherwise collide with the main pipe.

Ensure that the fitting for the pneumatic supply line points in the lengthwise direction of the pipes.

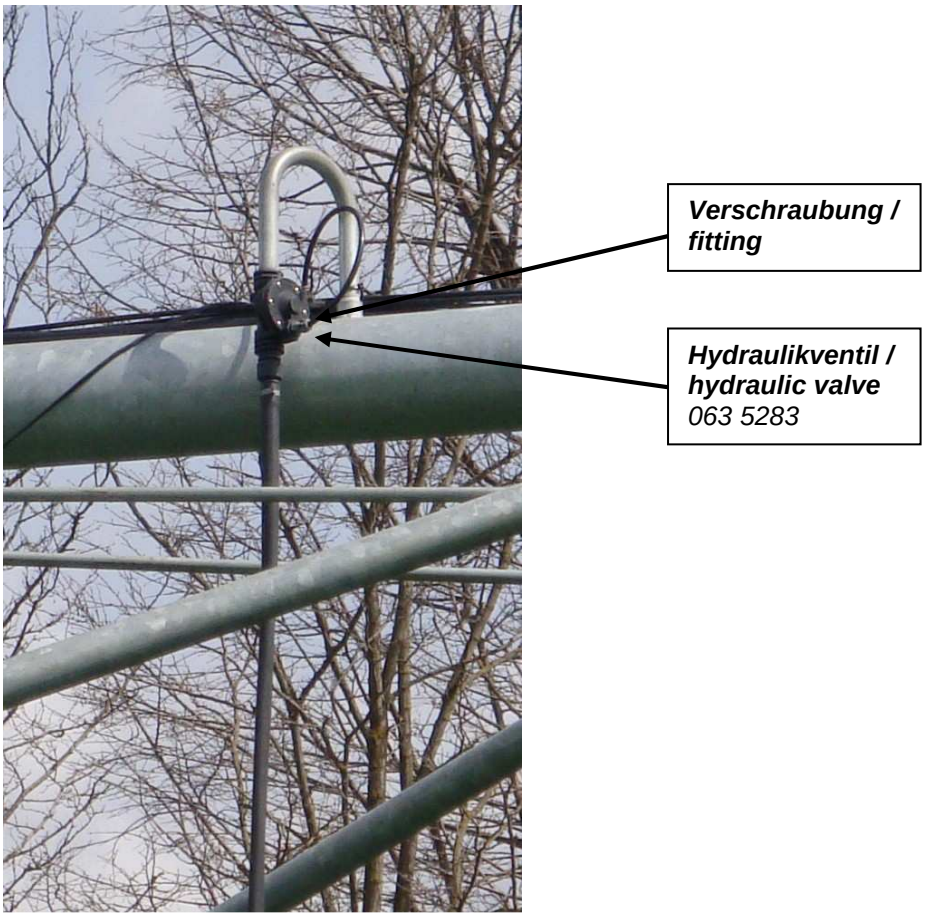

11.11 PNEUMATIC LINES

The nozzles of the *corner span* are divided into a total of *9 nozzle groups*. These are required for sequential regulation of the water volume required at any specific point in time since areas of various sizes are passed over per unit of time while the machine is swinging in or out.

WARNING: The pneumatic lines must be cut at right angles with sharp edges, and the line must not be crushed in doing so. For this reason, use a Stanley knife or a saw; ***never*** use a side cutter. Rough-edged and deformed line ends result in leaks in the system and faulty switching sequences of the nozzle groups.

Position the pneumatic line in a loop in the area of the hydraulic valves and T-fittings since the expansion and shrinkage of the line due to even moderate temperature differences could otherwise cause it to come loose.

Connect the nozzles and hydraulic valves as shown in the figure below. The distribution of the nozzles / nozzle groups can be seen in the subsequent figures.

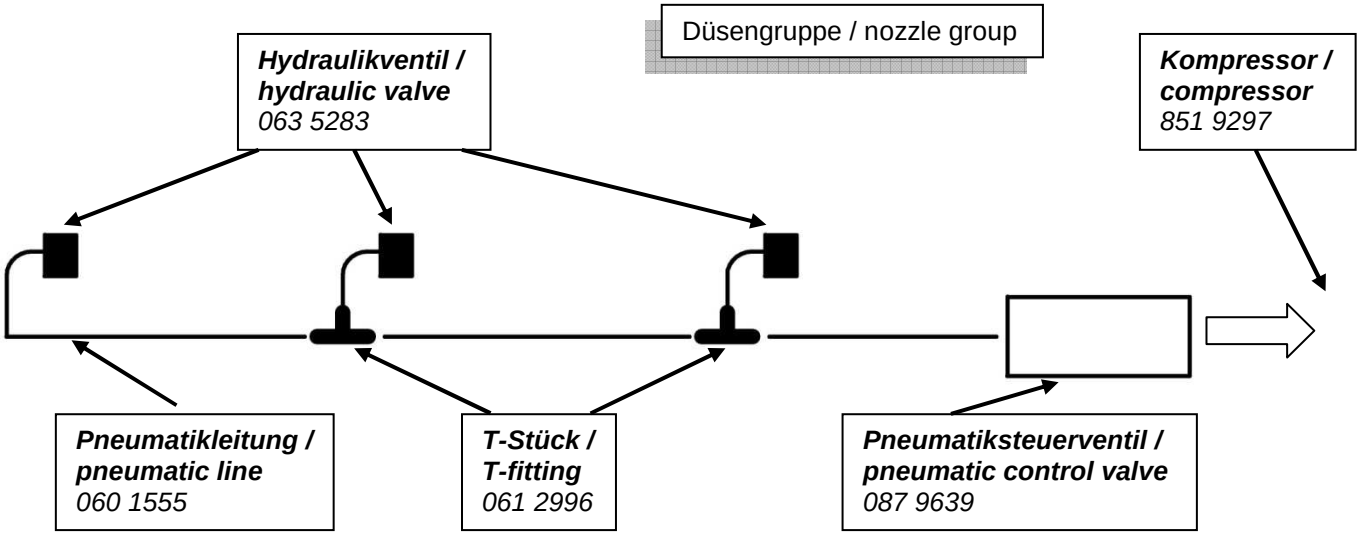

Cut each of the *pneumatic lines* with an **excess length** of about **2.2 m**. The lines must be run from the *corner span* to the last *span* of the *pivot*. There, they are connected to the respective *pneumatic control valves*. For a clean transition from the *corner span* to the *pivot*, bundle the 9 pneumatic lines together here with a *cable spiral*. On the *corner span* itself, use *cable ties* for this.

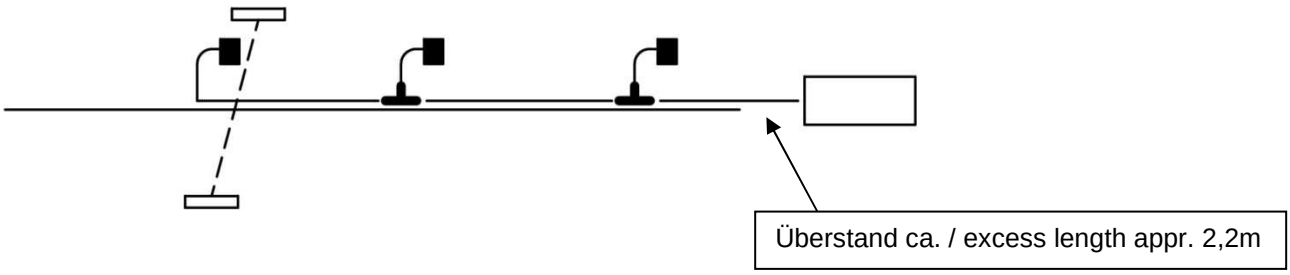

Distribution of the nozzles among the 9 total nozzle groups - 61.5 m span

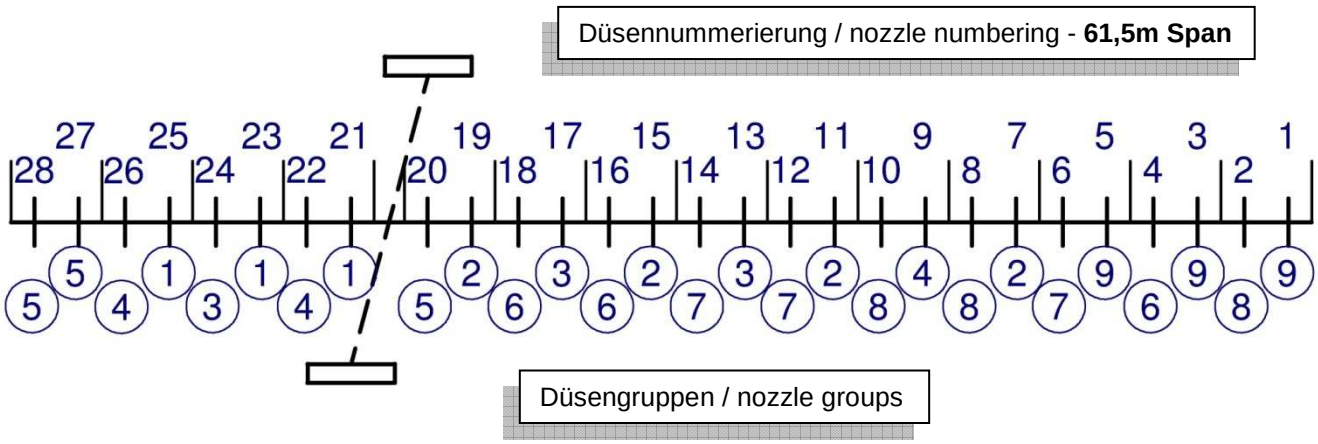

Distribution of the nozzles among the 9 total nozzle groups - 55.7 m span

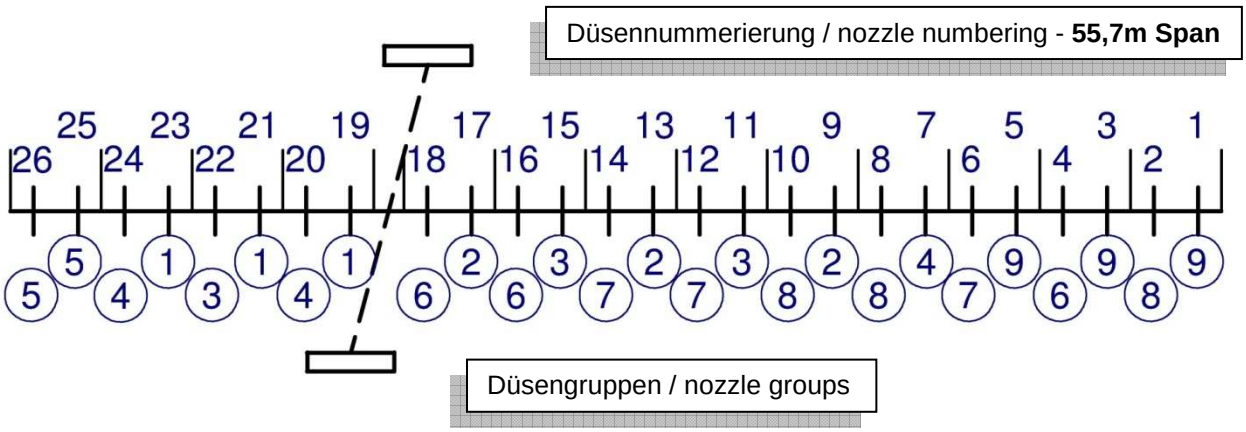

11.12 STEUERZENTRALE CORNER FAHRTURM

Montieren Sie die ***Steuerzentrale Corner Fahrturm*** - *851 8498* wie unten abgebildet am *Endrohr Überhang Corner*.

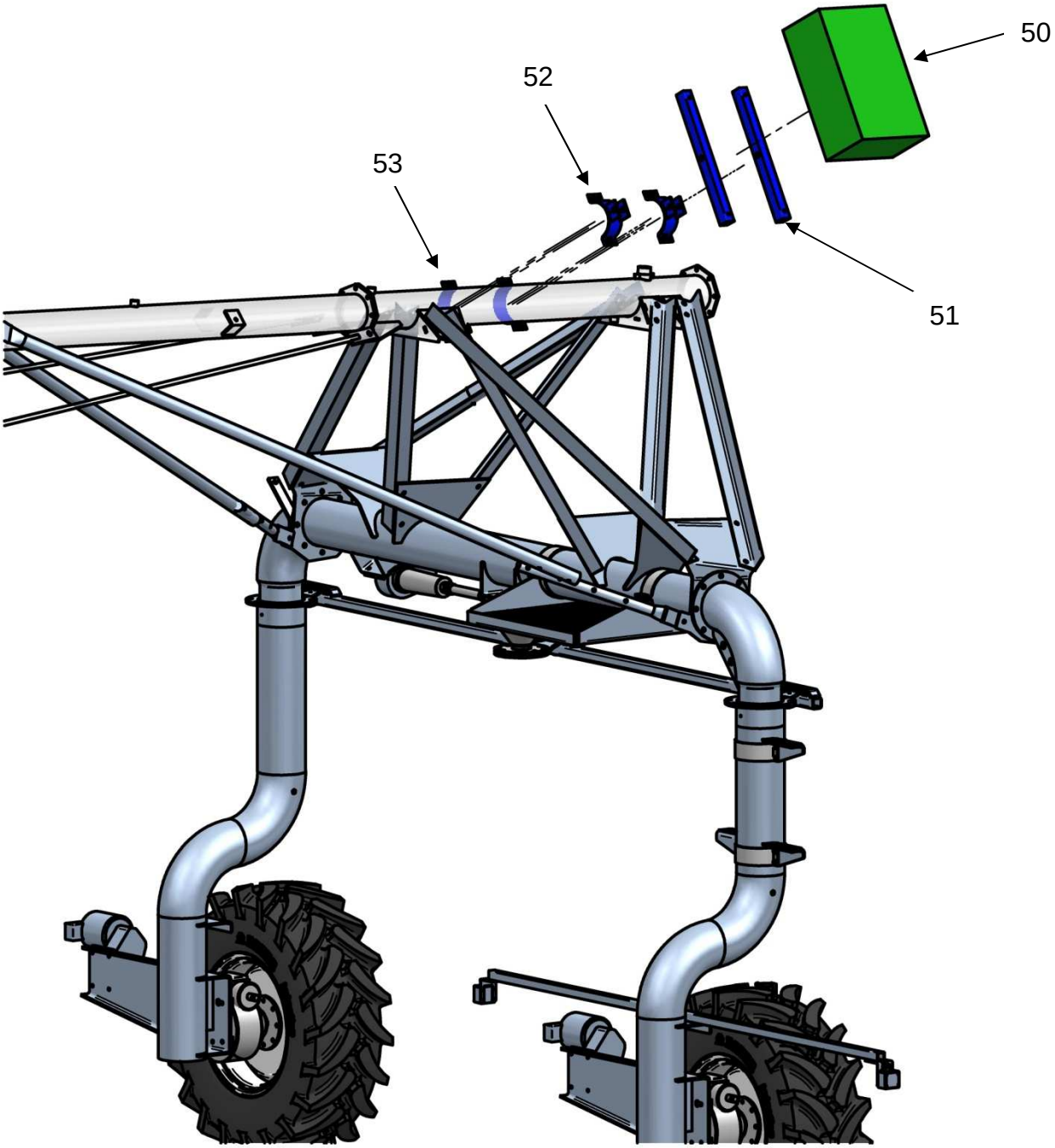

Pos. 50	*Steuerzentrale Corner Fahrturm* / control box track unit - ***851 8498***
Pos. 51	*Befestigung Schaltschrank* / mounting bracket - ***851 9357***
Pos. 52	Schellenhälfte / clamp - ***850 9330***
Pos. 53	Schellenhälfte / clamp - ***850 4813***

11.13 CORNER END TOWER CONTROL UNIT

Mount the ***corner end tower control unit*** *- 851 8499* to the *main pipe* next to the *compressor* of the *nozzle control* as shown below.

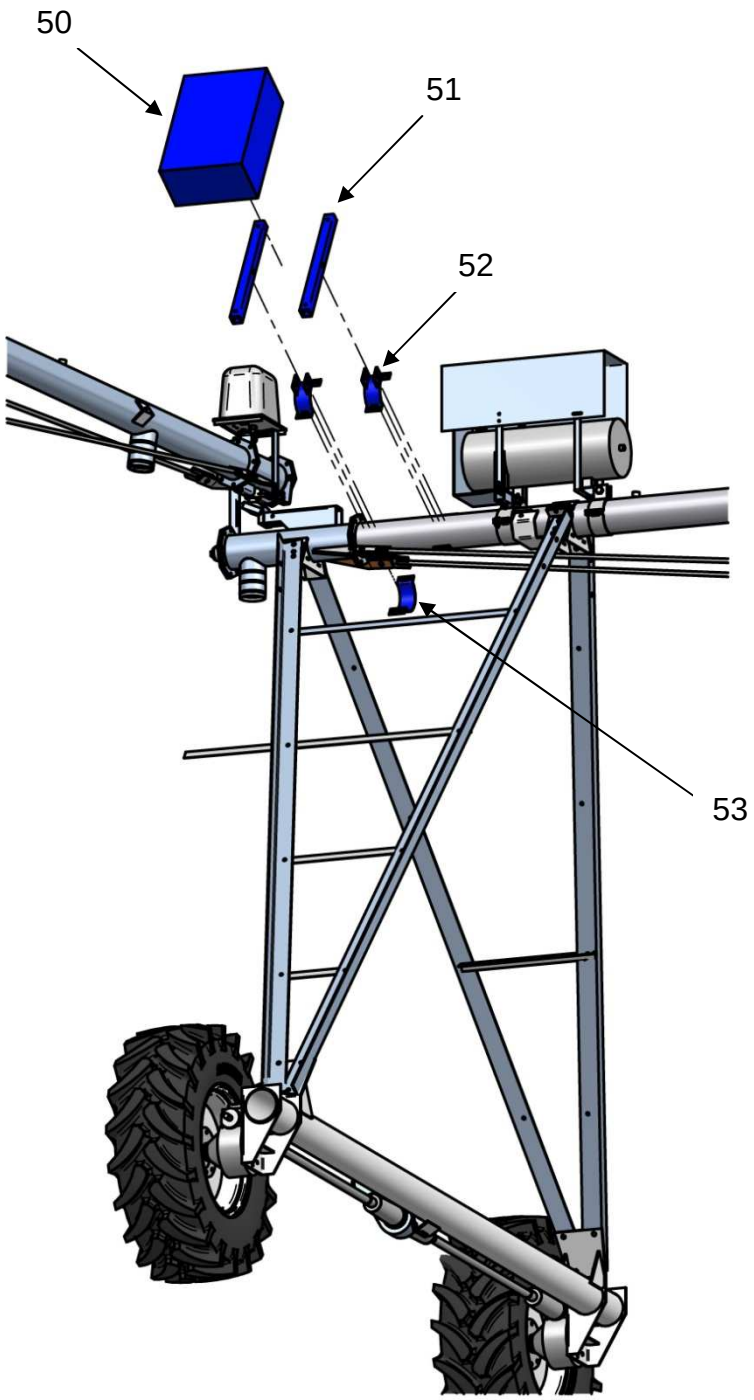

Pos. 50	*Steuerzentrale Corner Endturm* / control box end tower - ***851 8499***
Pos. 51	*Befestigung Schaltschrank* / mounting bracket - ***851 9357***
Pos. 52	Schellenhälfte / clamp - ***850 9330***
Pos. 53	Schellenhälfte / clamp - ***850 4813***

11.14 PIVOT CABLE

Connect the *corner end tower control cabinet* according to the *wiring diagrams* for the *corner end tower - 018 8260* and *corner end tower - 018 8261*. Affix the *pivot cable* as for a *CENTERSTAR*.

Corner end tower wiring diagram

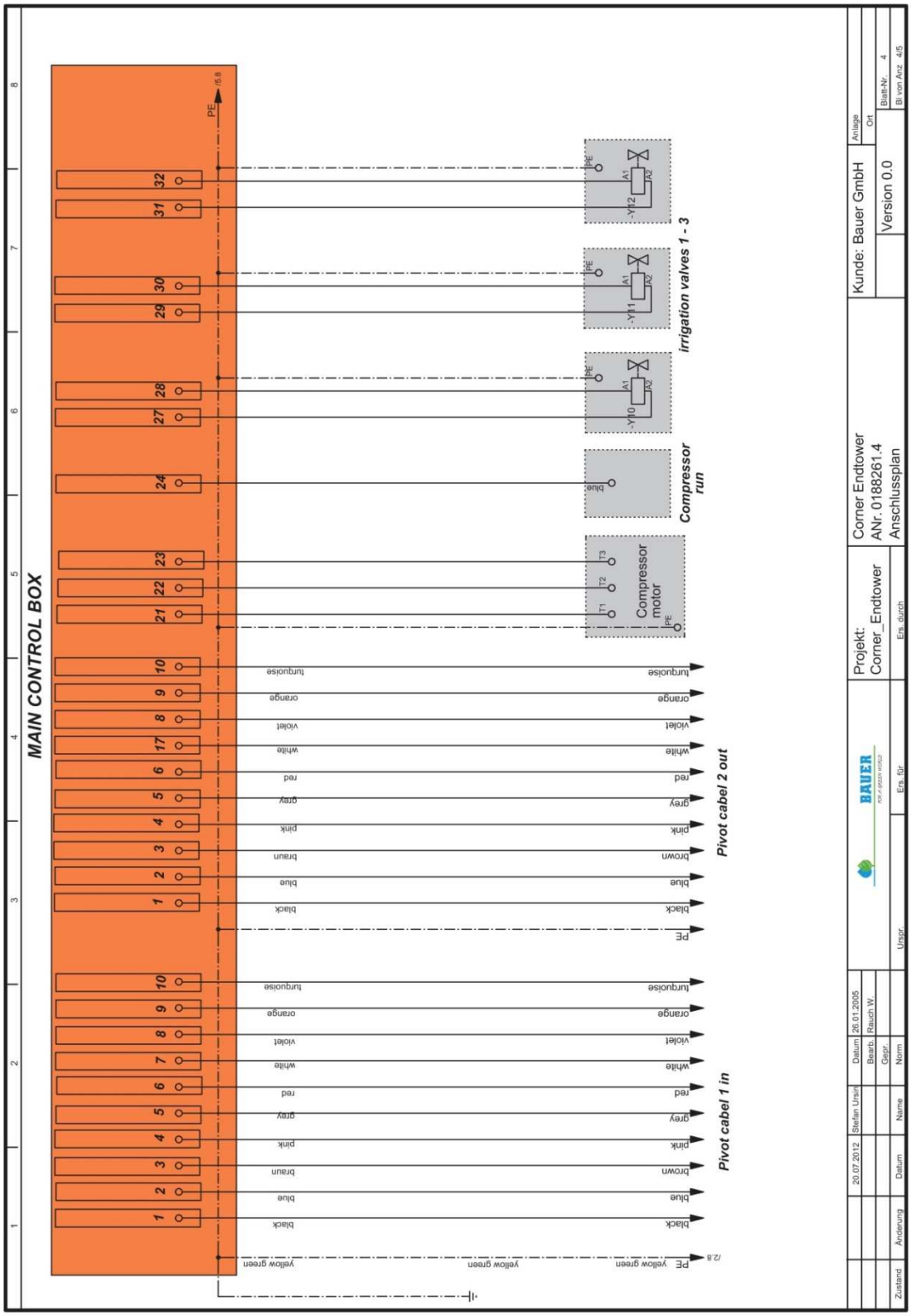

Corner drive tower wiring diagram

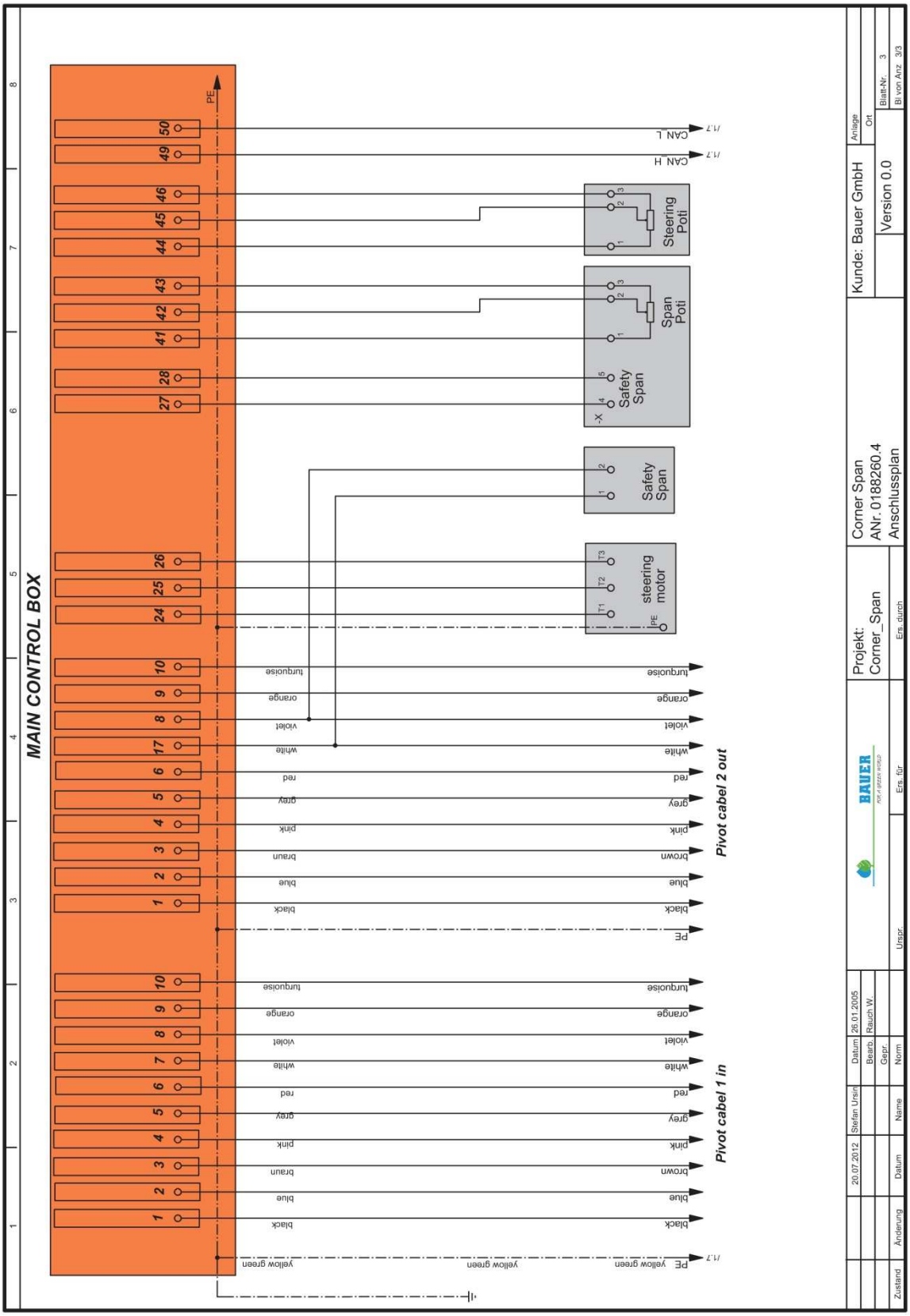

11.15 SPAN SENSOR TOWER BOX

Mount the *span sensor tower box - 851 9397* as shown below. Configuration of the span sensor takes place later after coupling of the *corner span*.

WARNING: To protect the electronic components during transport, the *slide bar* is firmly screwed to the bracket at the factory. During assembly, the screws must be loosened again sufficiently to allow the *slide bar* to glide easily.

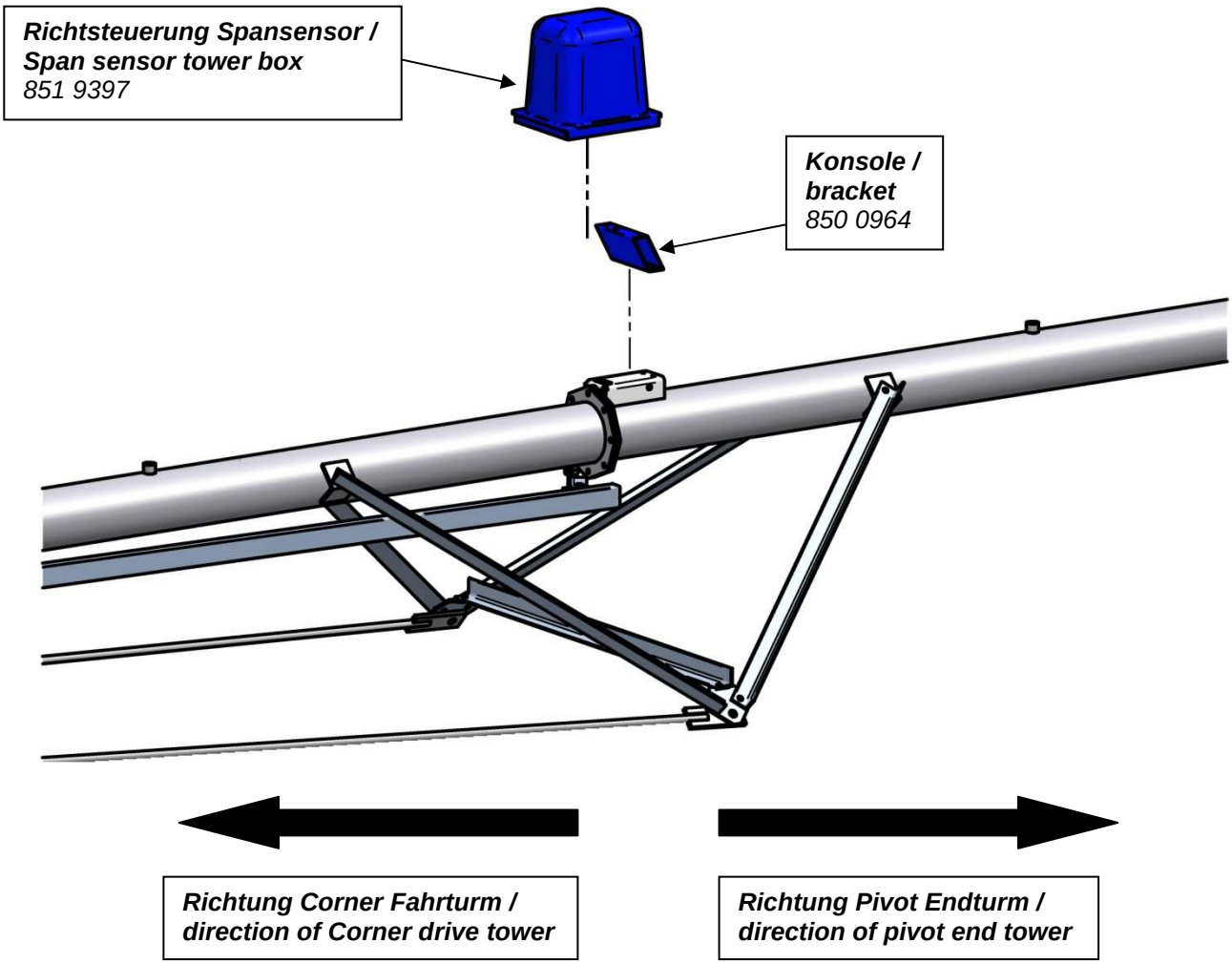

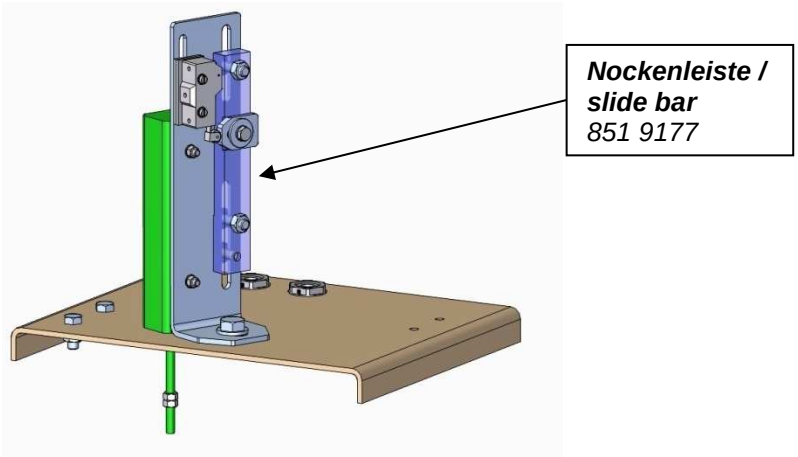

11.16 SPAN SENSOR TRANSMISSION PARTS

Mount the *span sensor transmission parts - 851 9375* as shown below.
Connection rod 6 is affixed to the *slide bar* in the *tower box* on the *hinge*. *Connection rod 8* is mounted directly to the sensor rod with *hinge 13* and *adapter nut 9*.

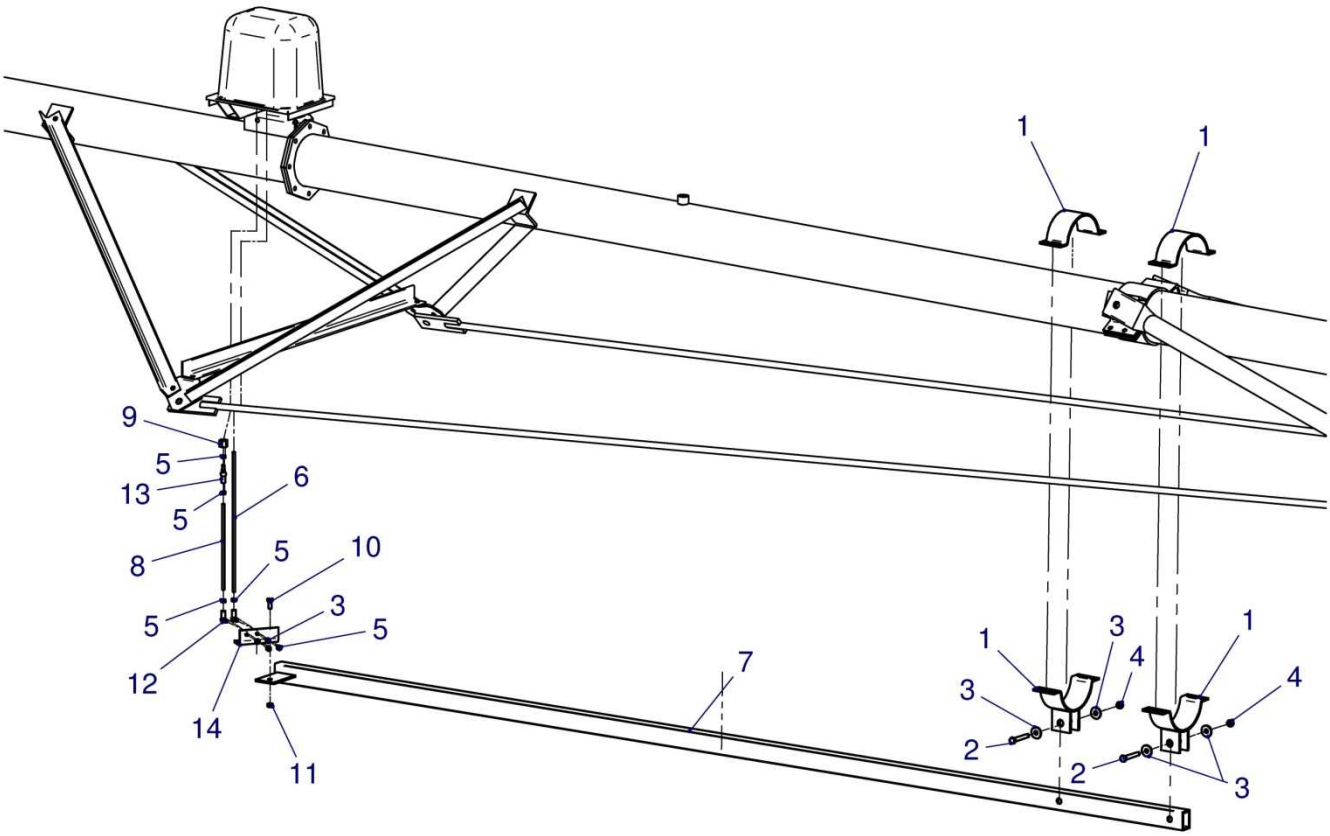

Pos. 01	Schelle / clamp - ***850 4815***
Pos. 02	Schraube / hex. bolt M12 x 80 - ***061 1162***
Pos. 03	Scheibe / washer A13 - ***061 2170***
Pos. 04	Mutter / nut M12 - ***061 1546***
Pos. 05	Mutter / nut M8 - ***061 1561***
Pos. 06	Stange f. Sicherheitskreis / Rod f. safety circuit - ***851 9182***
Pos. 07	Sensorbalken / sensor bar - ***851 9354***
Pos. 08	Gewindestange / threaded rod M8 x 280 - ***851 9381***
Pos. 09	Adaptermutter / adaptor nut M5 / M8 - ***851 9315***
Pos. 10	Schraube / hex. bolt M10 x 25 - ***061 1178***
Pos. 11	Mutter / nut M10 - ***061 1545***
Pos. 12	Gelenk / Hinge M8 - AS13 - 90°- ***063 5227***
Pos. 13	Gelenk / Hinge M8 - AS13 - 180°- ***063 5230***
Pos. 14	Winkel / angle - ***851 9183***

Span sensor transmission parts

The *sensor bar* stands at an angle of approx. 1° to 2° relative to the main pipe and is NOT affixed horizontal or parallel to this.

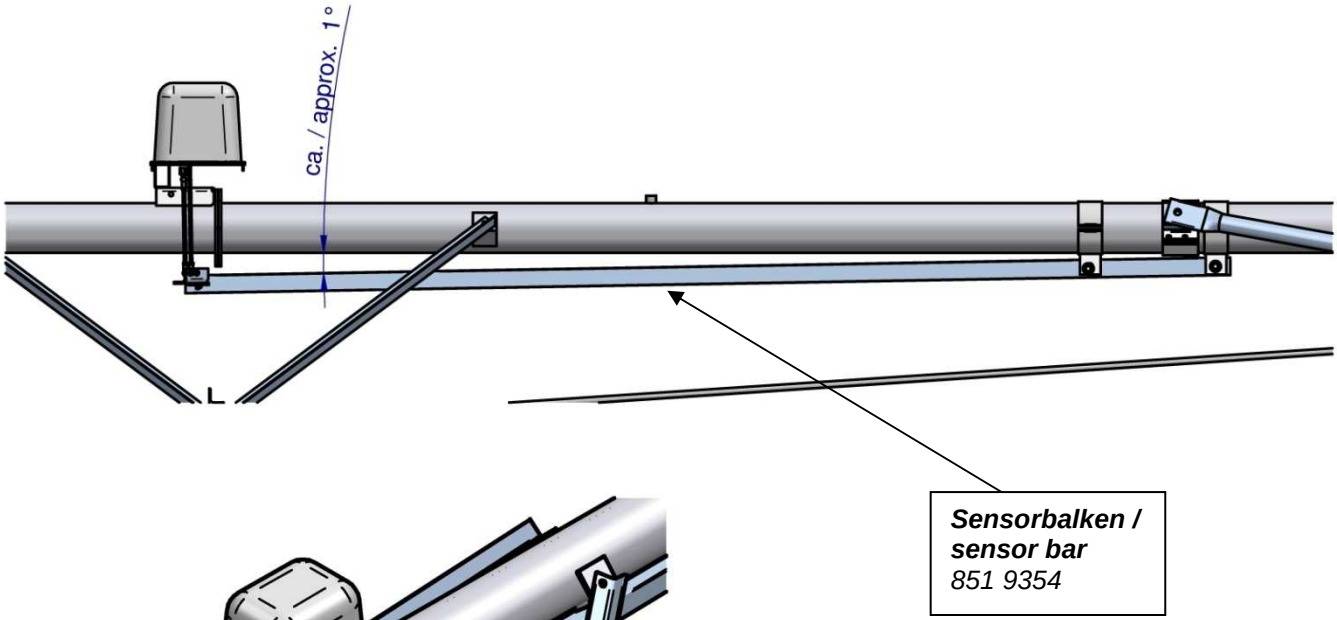

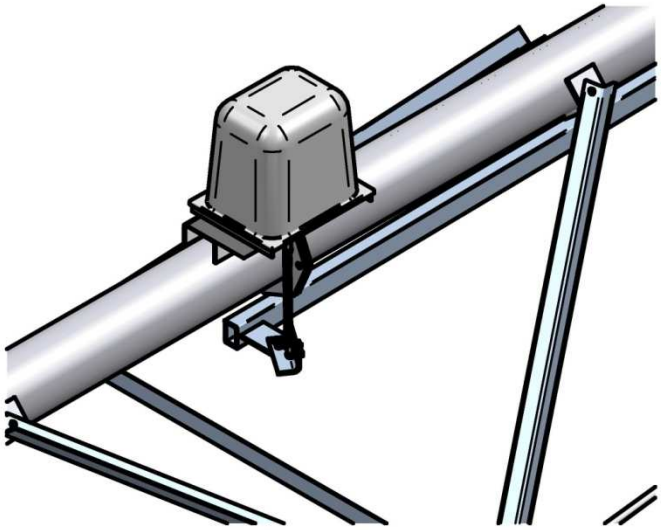

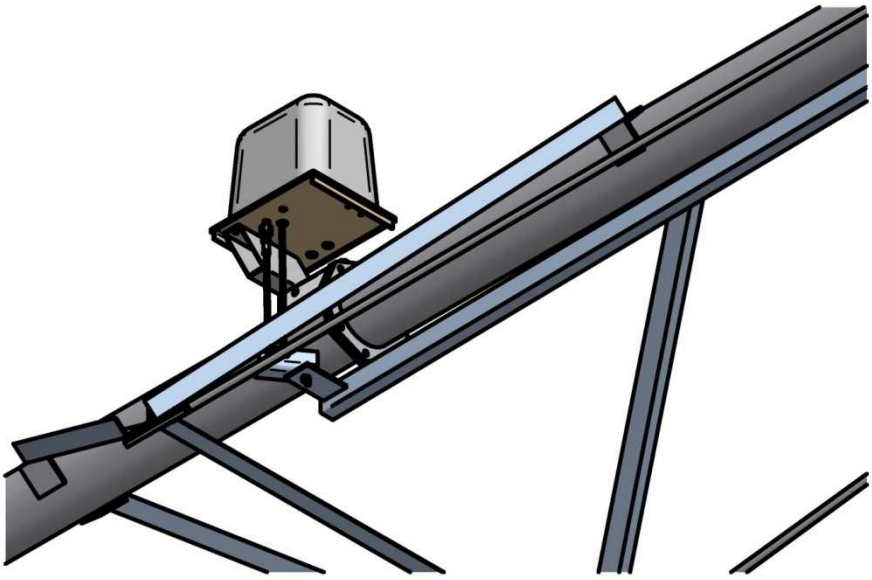

Span sensor transmission parts

Mount *connection rod 8* to the sensor bar such that it is situated roughly in the neutral position. More precise adjustments will be made later during initial start-up.

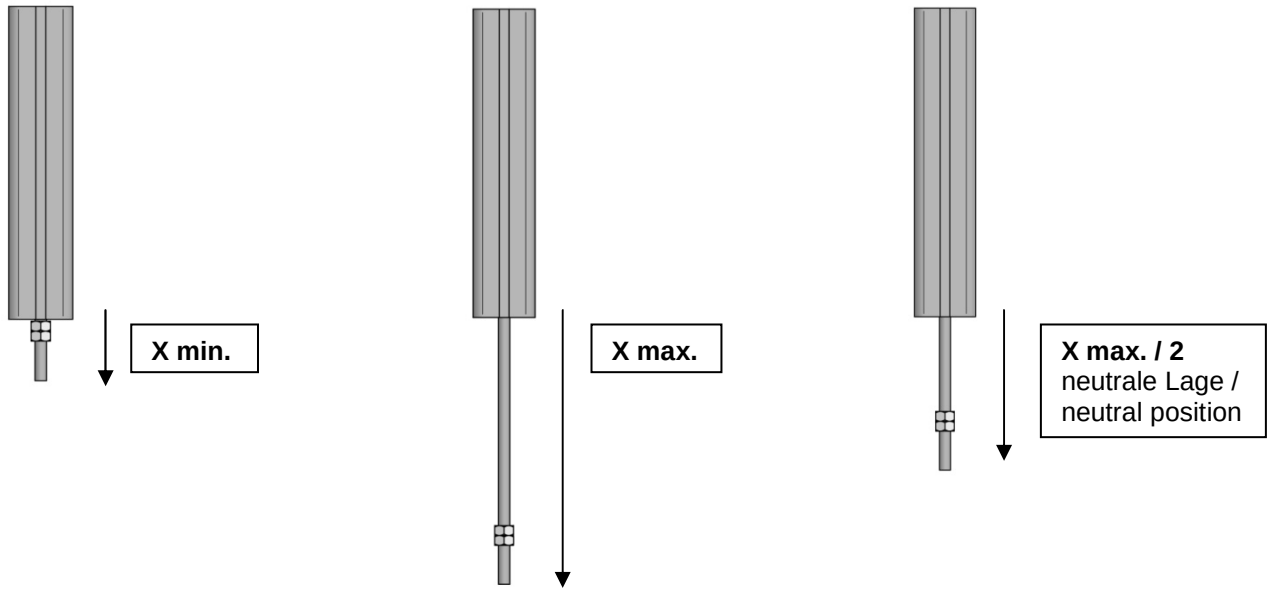

The *microswitch* should be situated roughly in the middle of the *safety cam* and must be actuated. More precise adjustments will be made later during initial start-up.

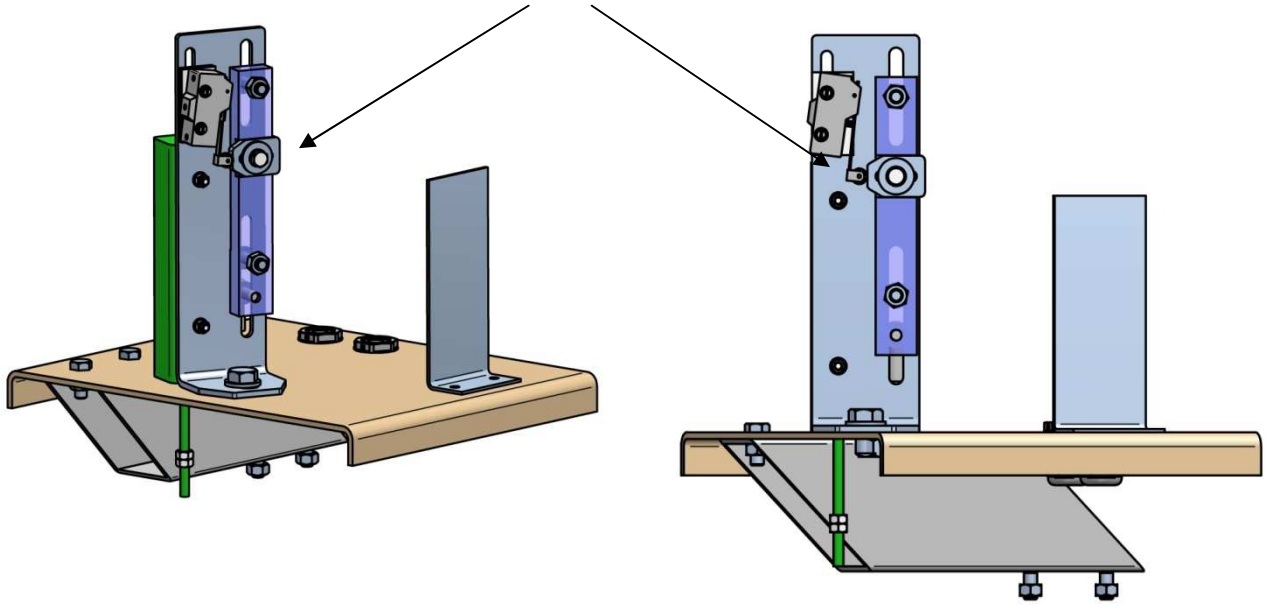

11.17 ELECTRICAL CONNECTION - SPAN SENSOR TOWER BOX

Connect the *span sensor tower box* with the *corner drive tower box* according to the *wiring tower* for the *corner drive tower - 018 8260*.

Span sensor tower box wiring diagram

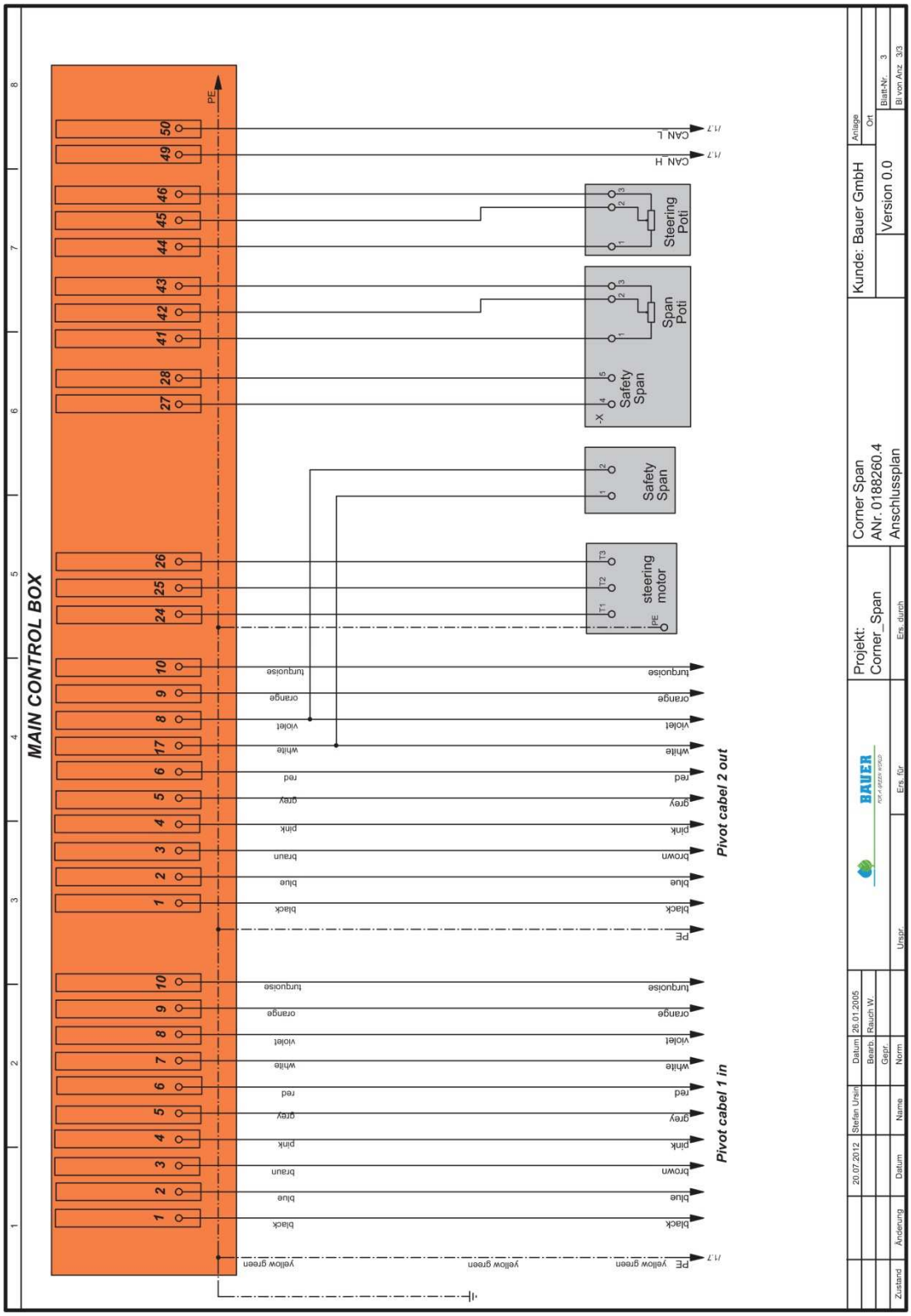

11.18 SHAFT GUIDE

Mount the two *shaft guides - 851 9330* to the *cross tube - 851 9317*. Lift up the truss structure to do this. Push both *shaft guides* in the direction indicated by the arrow and then affix them (see figure below). Mount the two ***cable holders 11 - 850 3579.*** Fasten the two *side support cables 41 - 850 3596* in a crossed over fashion (see *11.5 CORNER SPAN).*

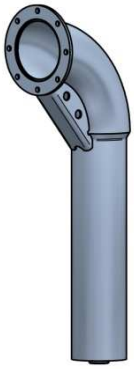

Führung Corner / shaft guides
851 9330

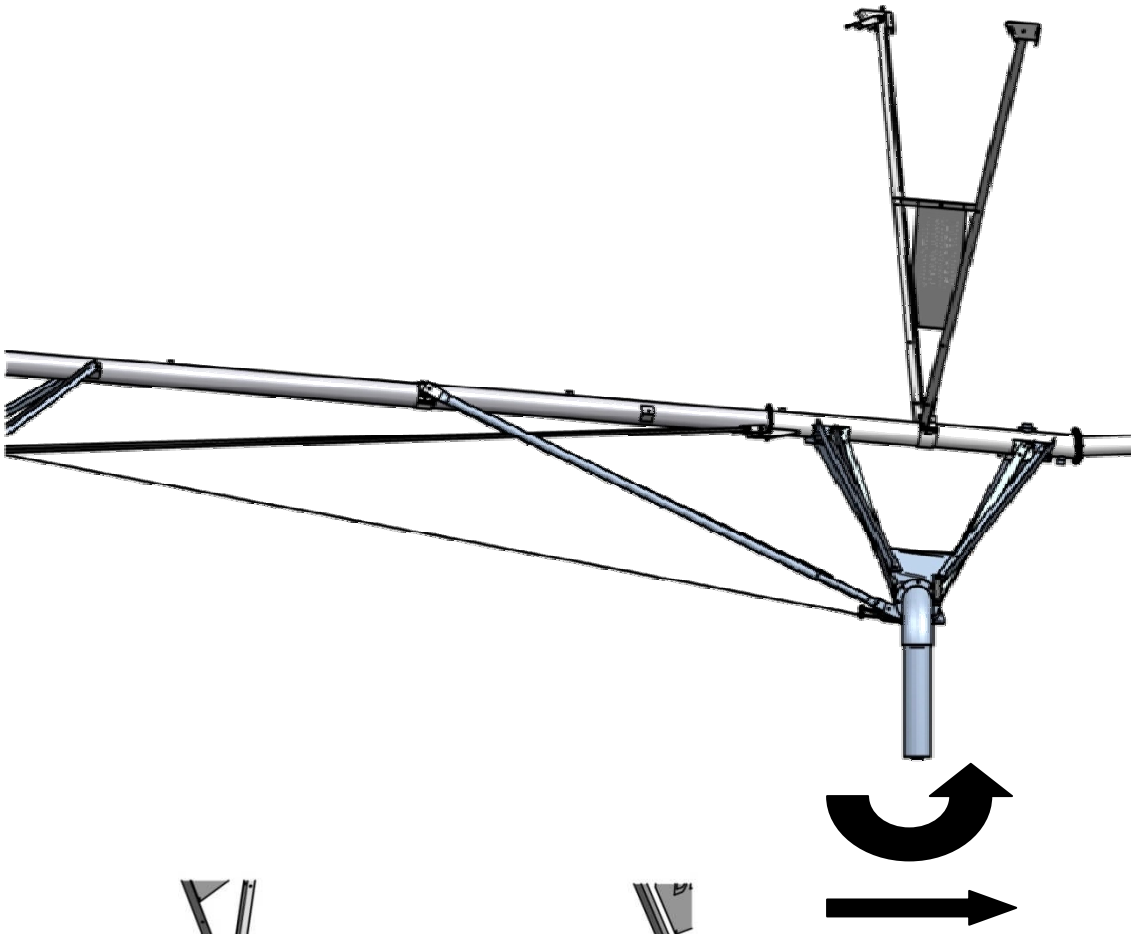

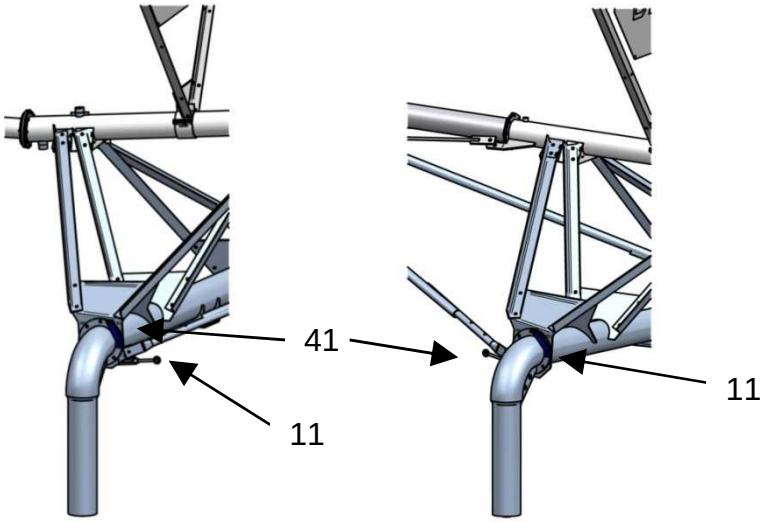

11.19 STEERING GEARBOX / STEERING MOTOR

Now mount the *steering gearbox 77 - 850 4188* and the *steering motor 78 - 062 9320.* Connect these with the *drive shaft* and the *couplers* and cover these with *shield 8* and *bell shield 7*.

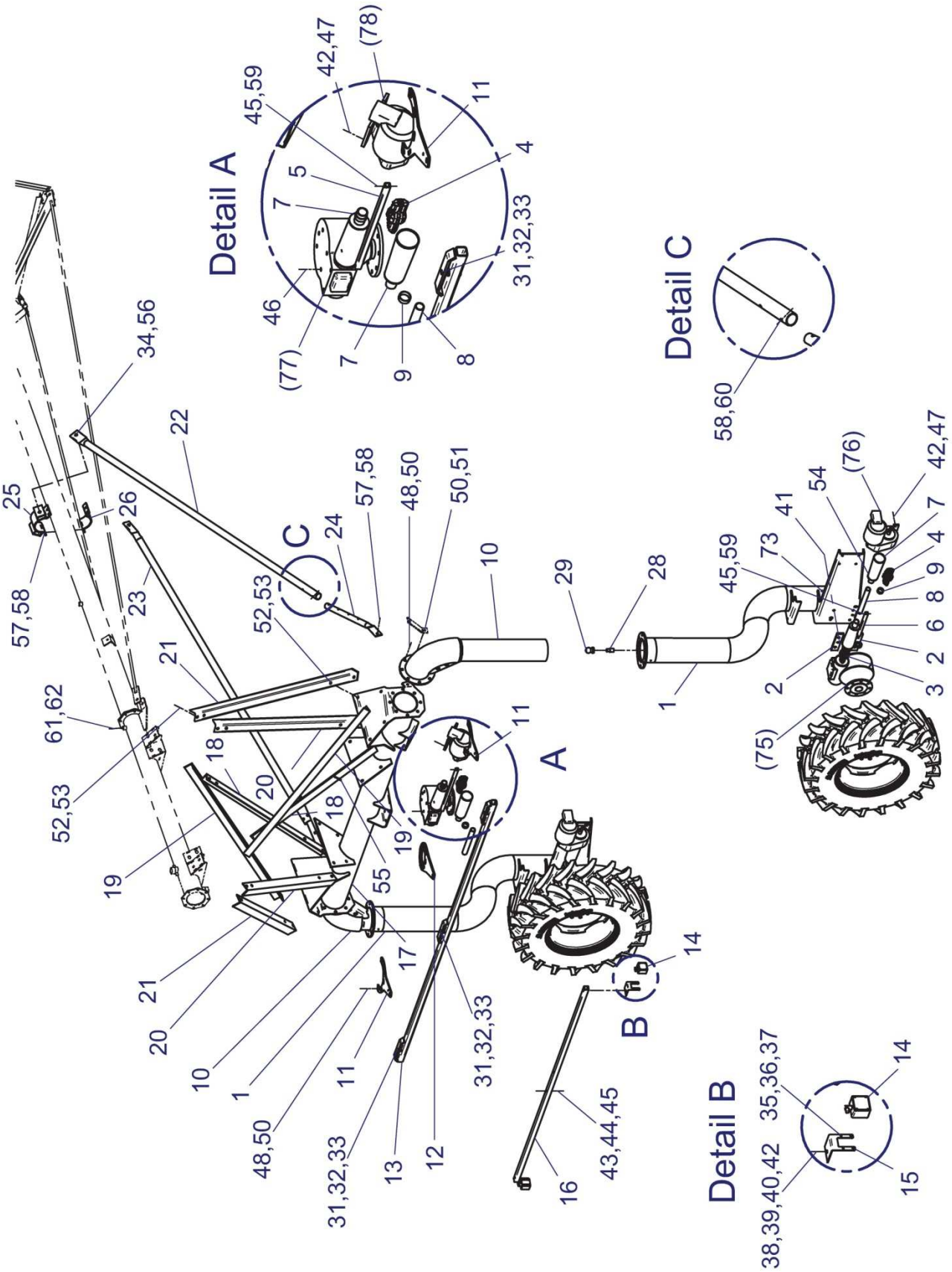

11.20 DRIVE TOWER PLATFORM

Mount the *platform* on the *cross tube* as shown below on the side of the *control cabinet.*

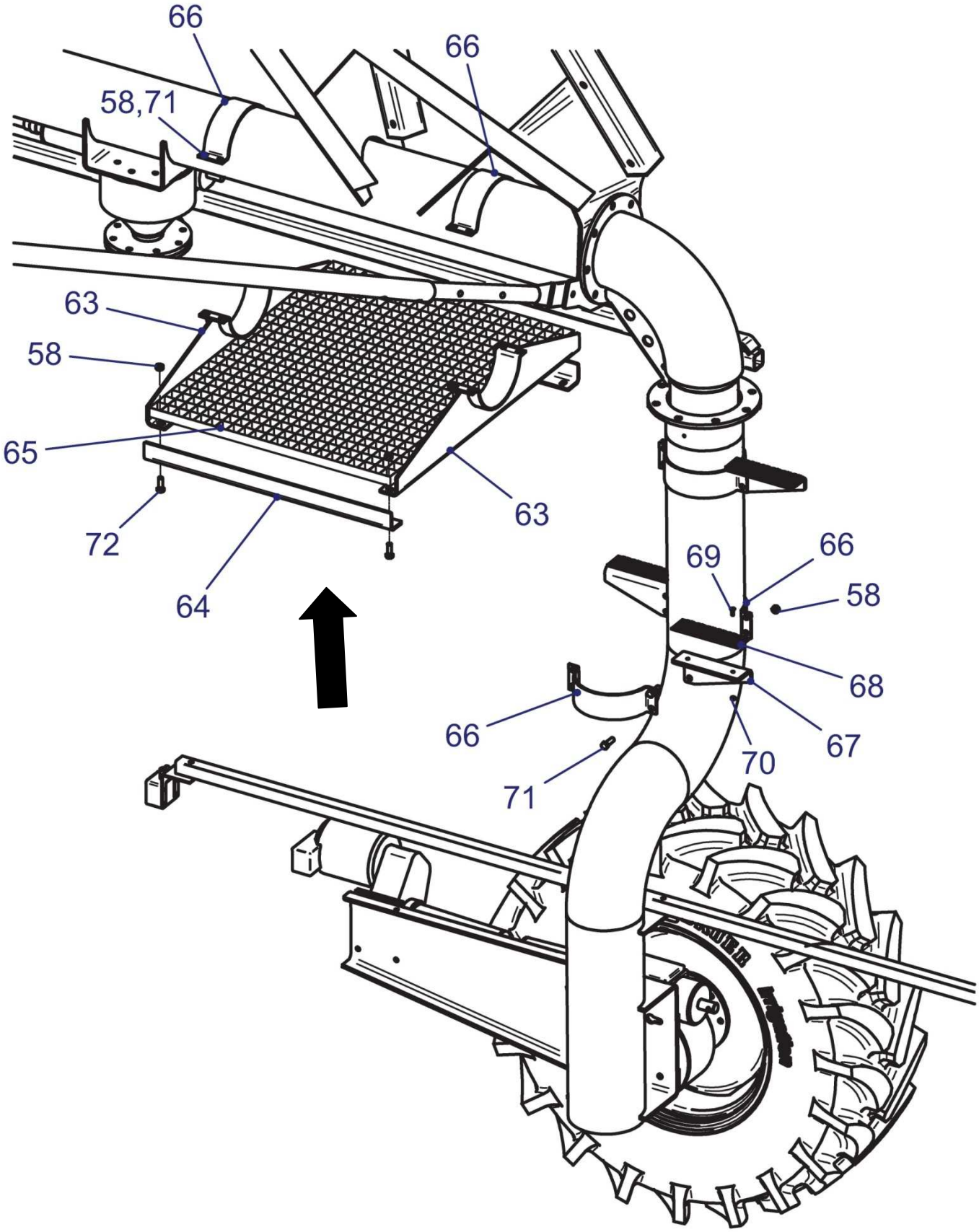

11.21 CENTER STEERING LEVER

Mount the *center steering level - 851 9345* as shown at a roughly 45° angle on the *steering gearbox*, assuming that the CORNER SPAN is at a 90° angle to the *pivot.*

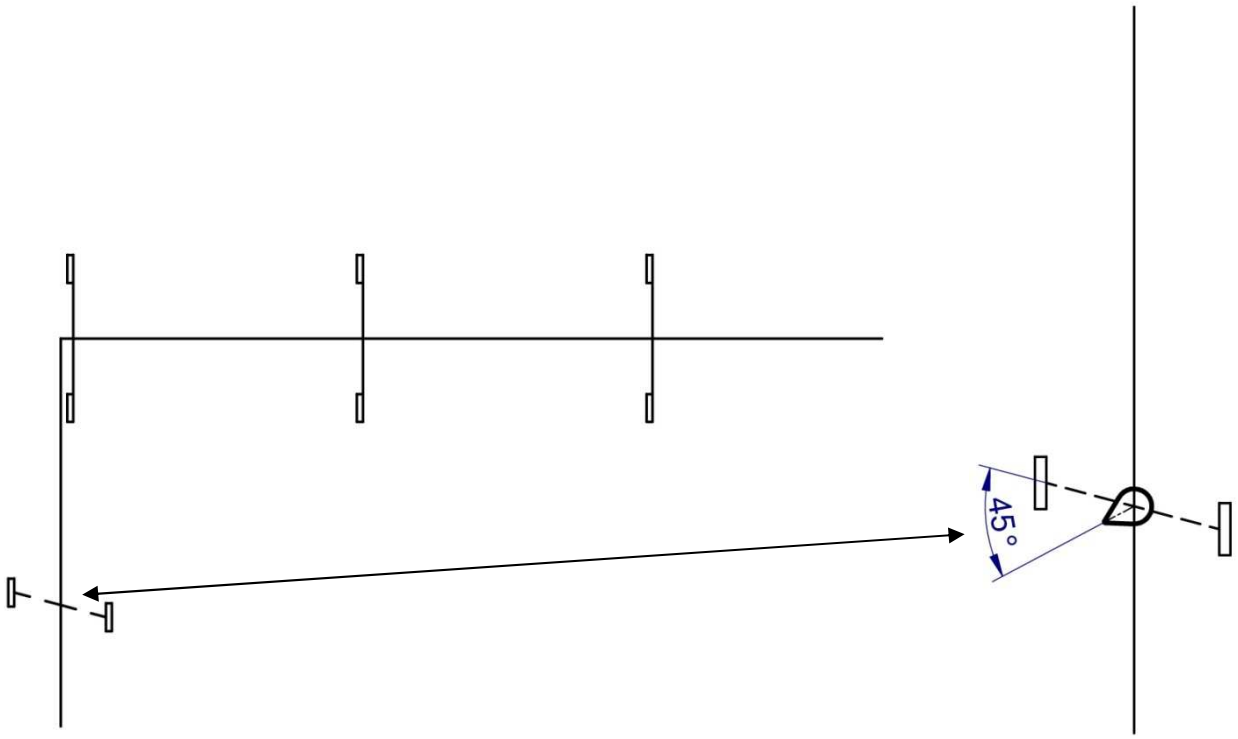

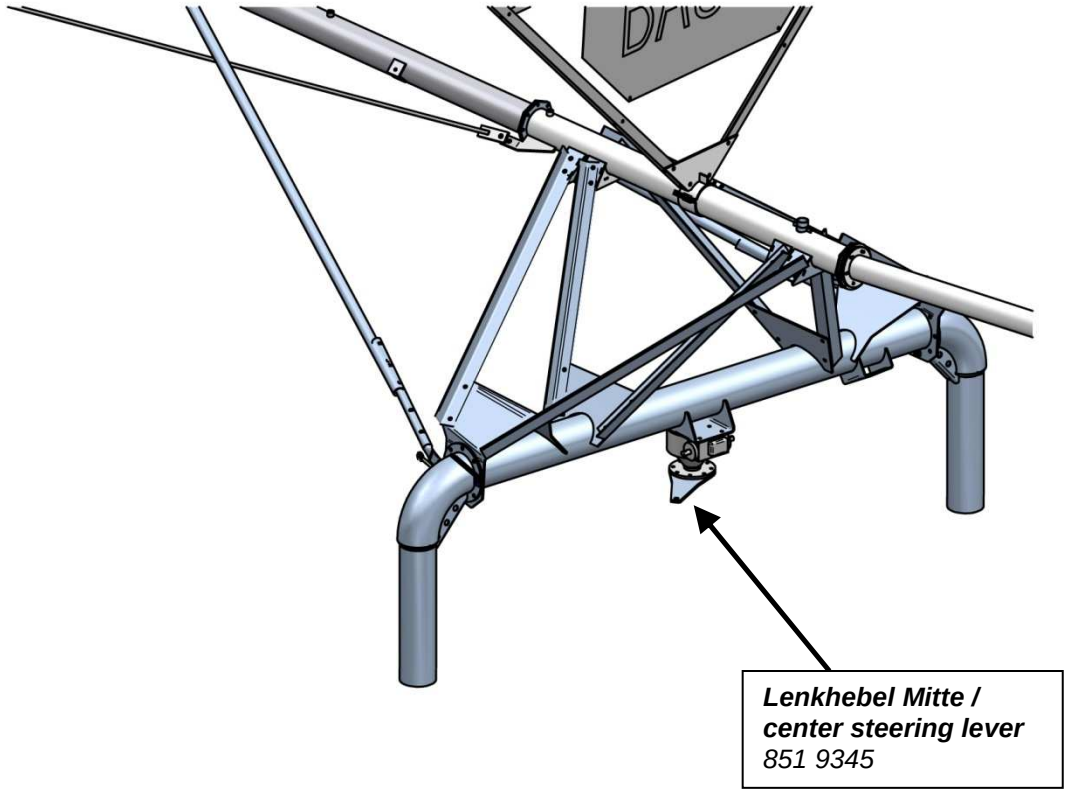

11.22 WHEEL BASES

Insert the *ball 29 - 850 6471* and *bolt 28 - 851 9343* into the *wheel base 1 - 851 9341*. The *ball* and *bolt* are already mounted and bonded in place at the factory.

WARNING: Lubricate the *ball 29* with sufficient *grease* after inserting it into the *wheel base*. This position receives no further lubrication during operation. Also lubricate the inner surface of upper wheel base pipe on grease fitting level, where the *shaft guide - 851 9330* is inserted.

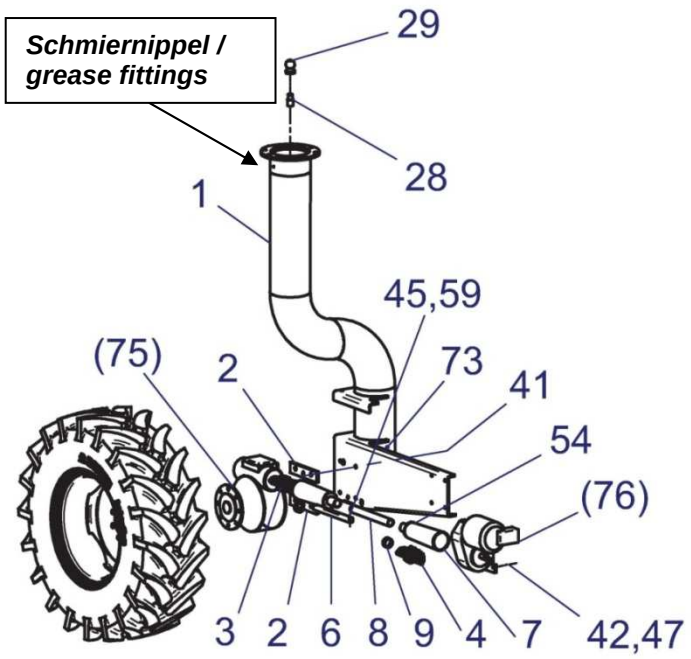

Lift up the truss structure, place the *wheel bases* upright and carefully thread the two *shaft guides* into the respective *wheel bases*. Then lower the truss structure again; it now rests on the two *wheel bases*.
Mount the two *wheel gearboxes, drive motors, drive shafts, etc.* Note that **2 *spacer plates - 851 9340*** must be screwed in place between ***wheel gearbox*** and the ***wheel base*** in each case.

WARNING: For the *drive motor* of the *corner drive tower*, use the ***shielded motor cable*** *- 850 0636*.

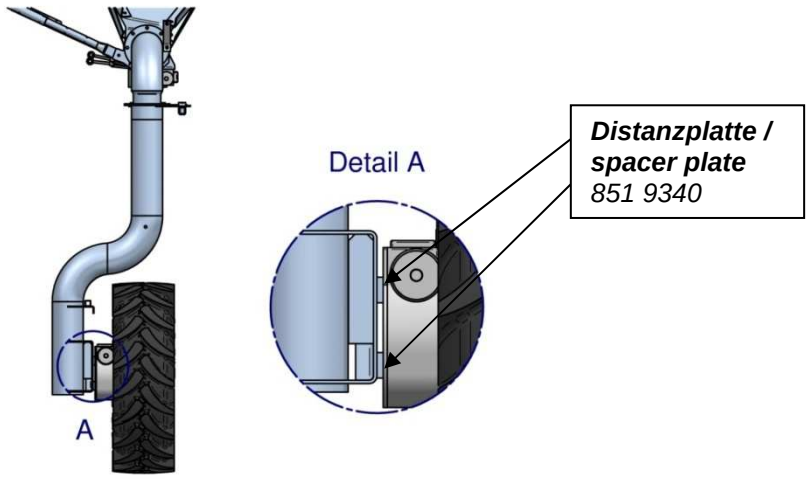

11.23 DRIVE TOWER WHEELS

Mount the *drive tower wheels* (16.9) to the *corner drive tower*. Position the second *wheel base* somewhat elevated on a raised surface, such as wooden pallets, while you mount the first *wheel* in order to avoid an overly inclined orientation.

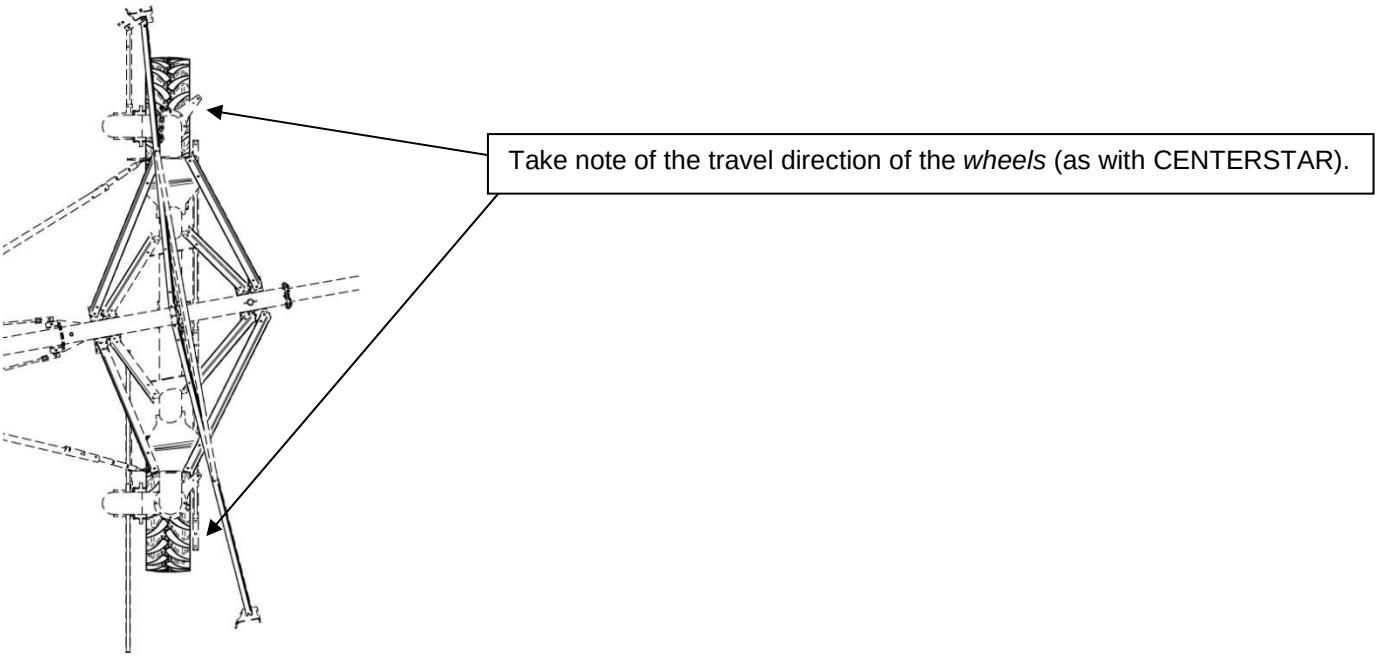

11.24 STEERING

Mount the two *steering levers* to the *wheel bases* as shown below at a roughly 45° angle to the *cross tube* and parallel to the *center steering lever*. The *steering lever* must be fastened to the underside of the flange on the *wheel base (see figures below).* The *corner span* must be situated here at a roughly 90° angle to the *pivot*.

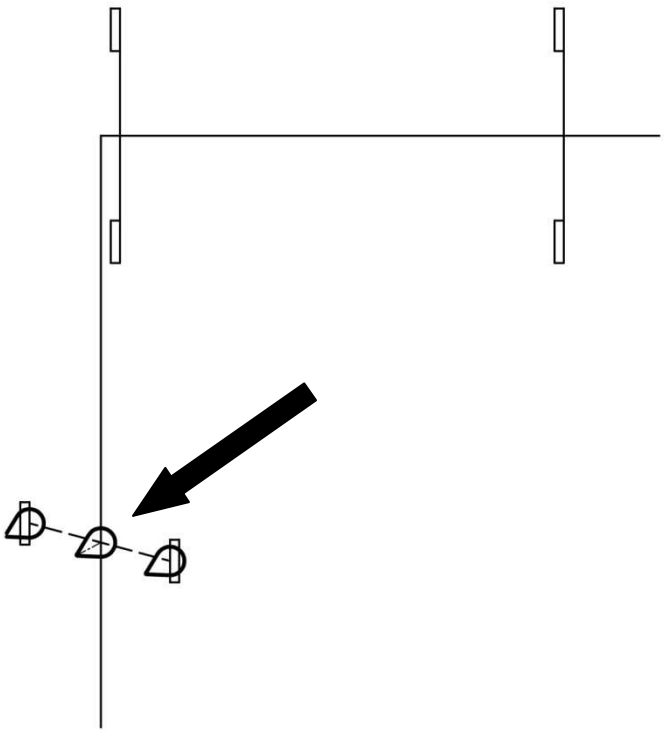

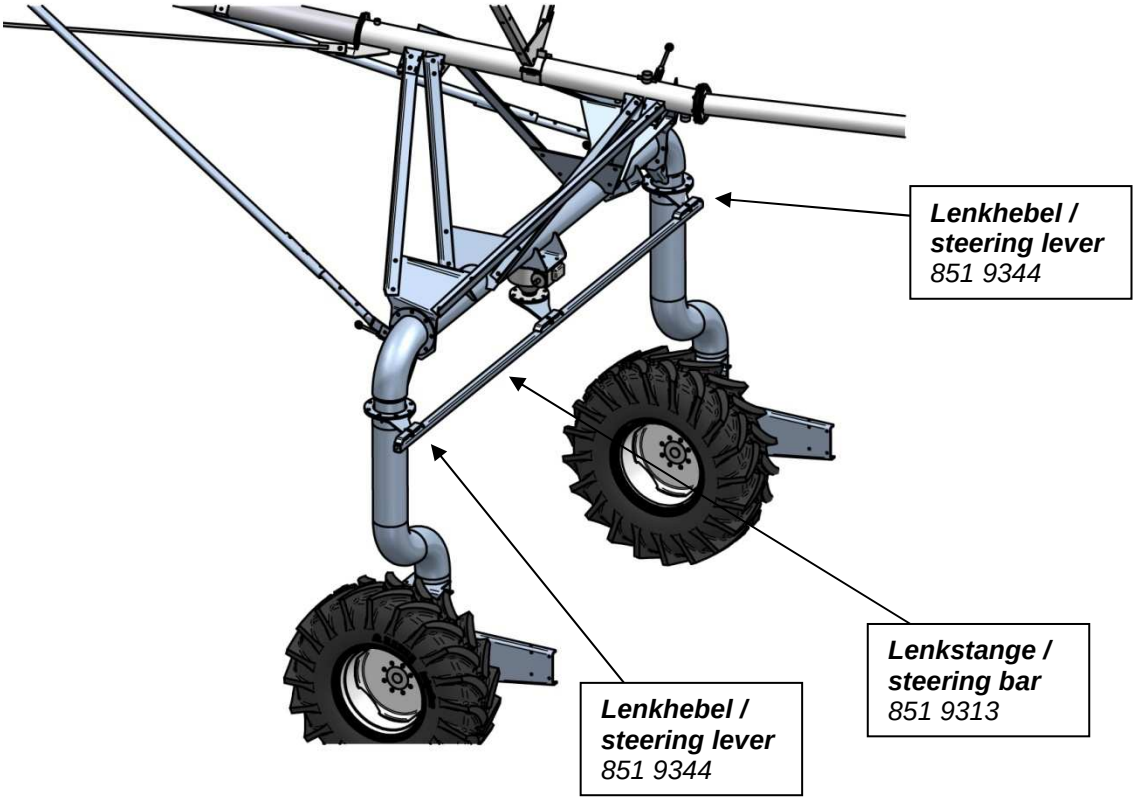
Lenkhebel /
steering lever
851 9344
Lenkstange /
steering bar
851 9313
Lenkhebel /
steering lever
851 9344

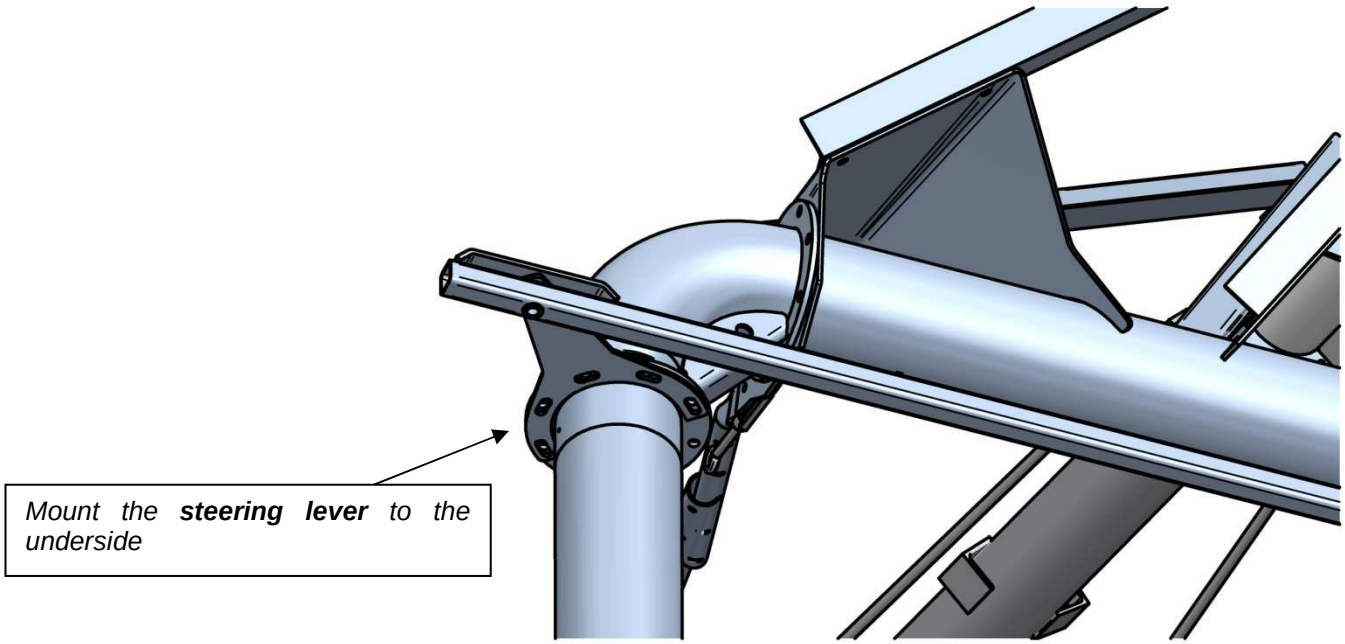
Mount the **steering lever** to the underside

Check the alignment of the two wheel bases on the CORNER drive tower relative to each other as well as to the ground and the CORNER span.

Both wheel bases must stand parallel to each other and nearly at a right angle to the ground while in the unladen state (see figure). Note that when the corner span is in the swung-out position, the angle is approx. 90°, while the angle in the swung-in position is approx. 87° - 88°.

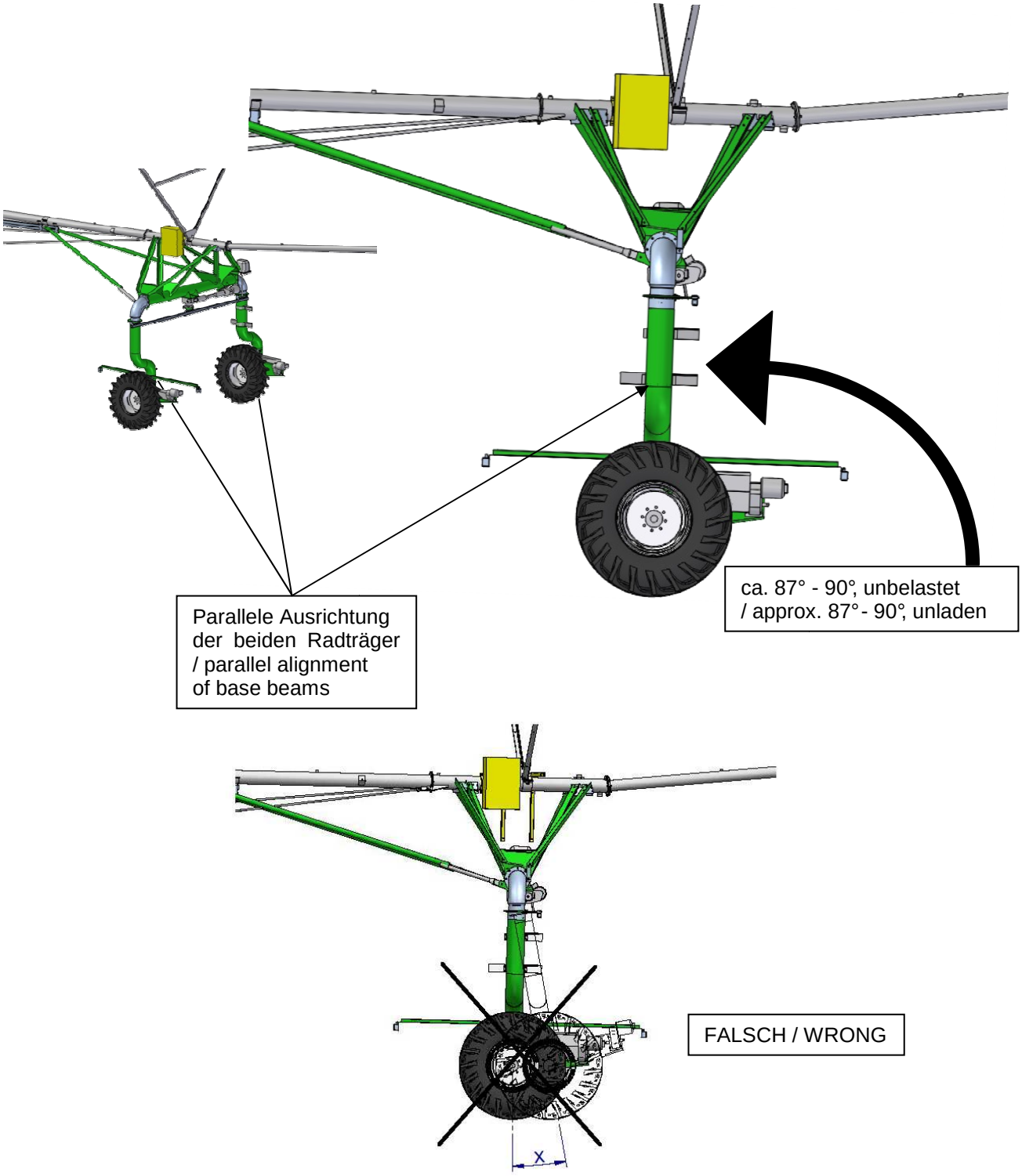

Check the alignment of the two drive tower wheels to each other on the CORNER drive tower.

Both tower wheels must stand PARALLEL to each other.

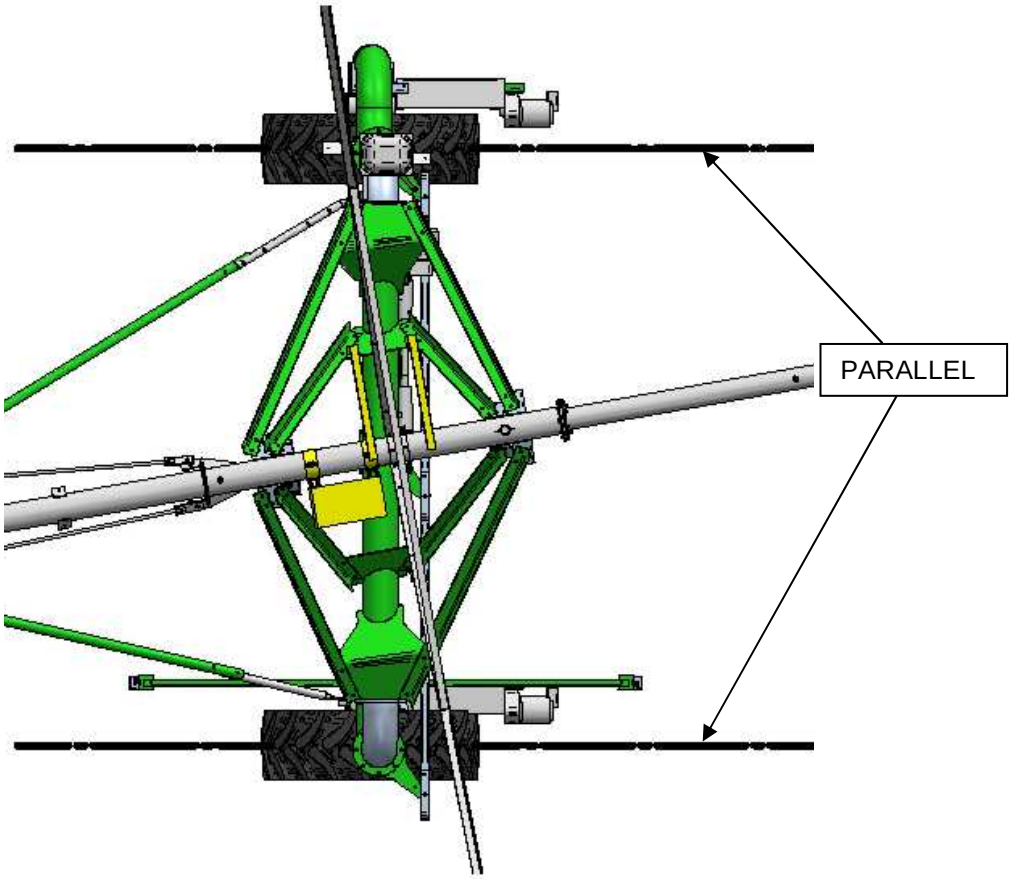

11.25 STEERING ANTENNA

Mount the *steering antennas - 087 9630* as shown below. When the *corner span* is swung in (90° position), the steering antenna is fastened to the outer *wheel base*, as seen from the center of the circle.

The *steering antennas* must be oriented parallel to each other and at a right angle to the ground.

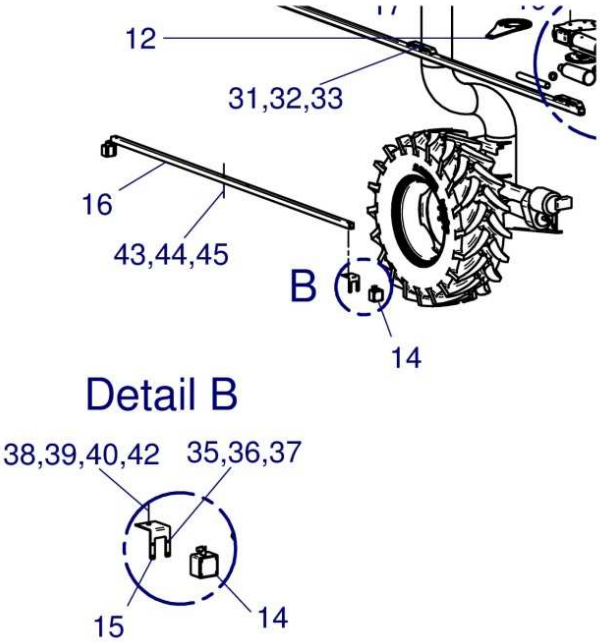

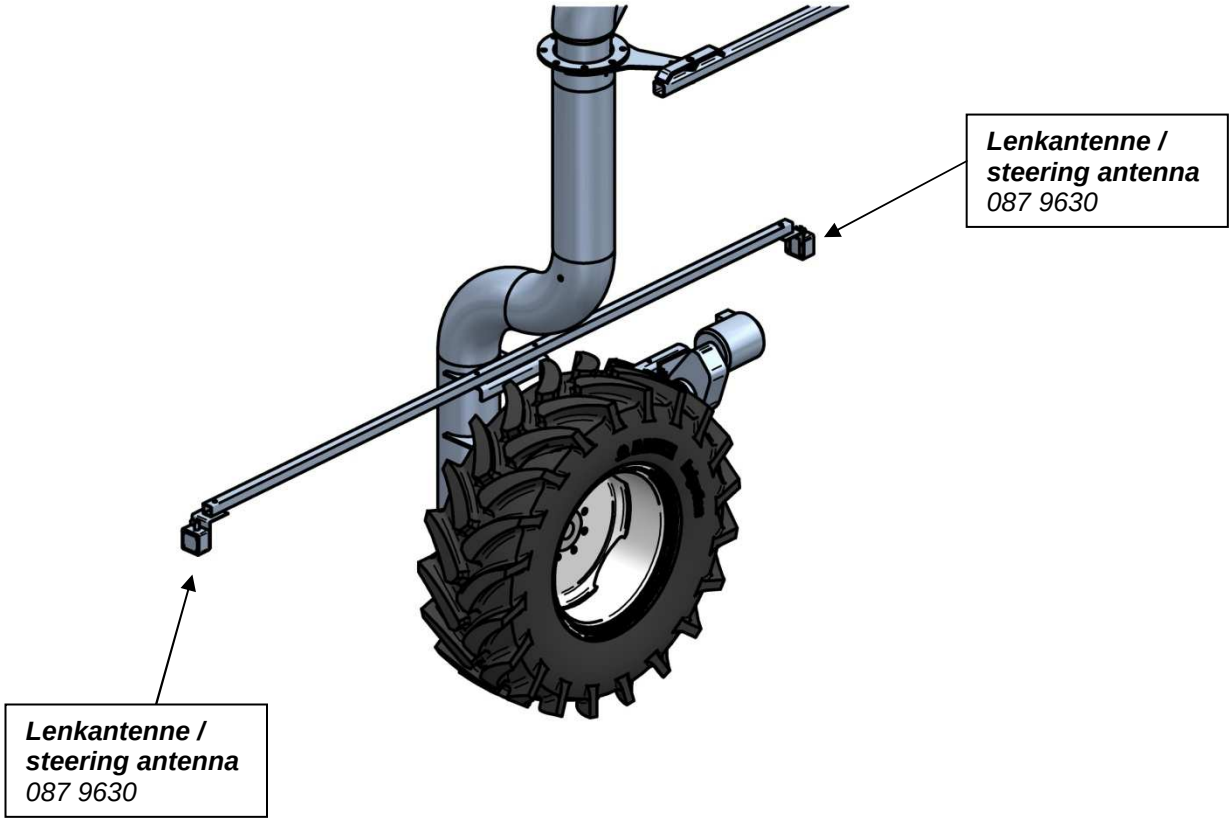

11.26 STEERING TOWER BOX

Mount the *steering tower box - 851 9396* as shown below. When the *corner span* is swung in (90° position), the *tower box* is fastened to the inner *wheel base*, as seen from the center of the circle.

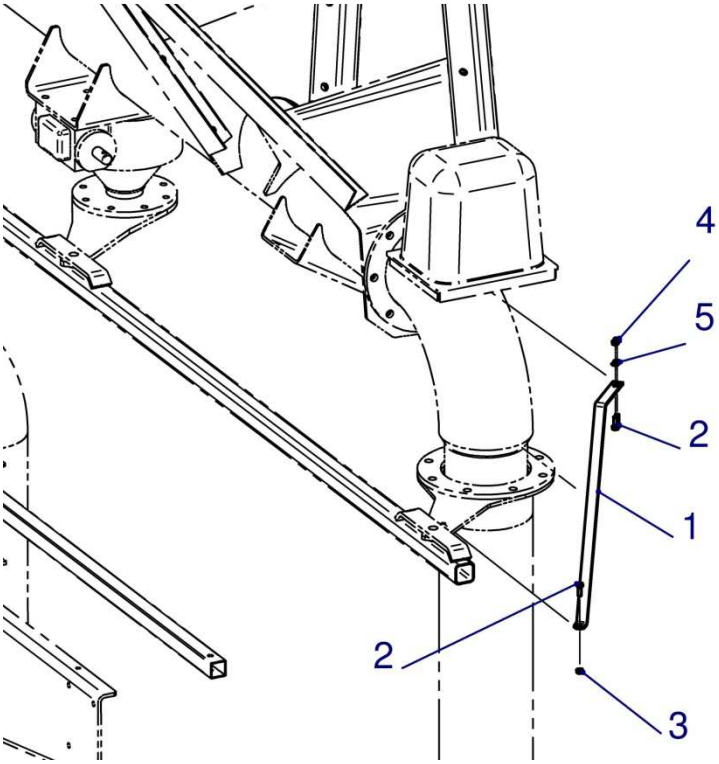

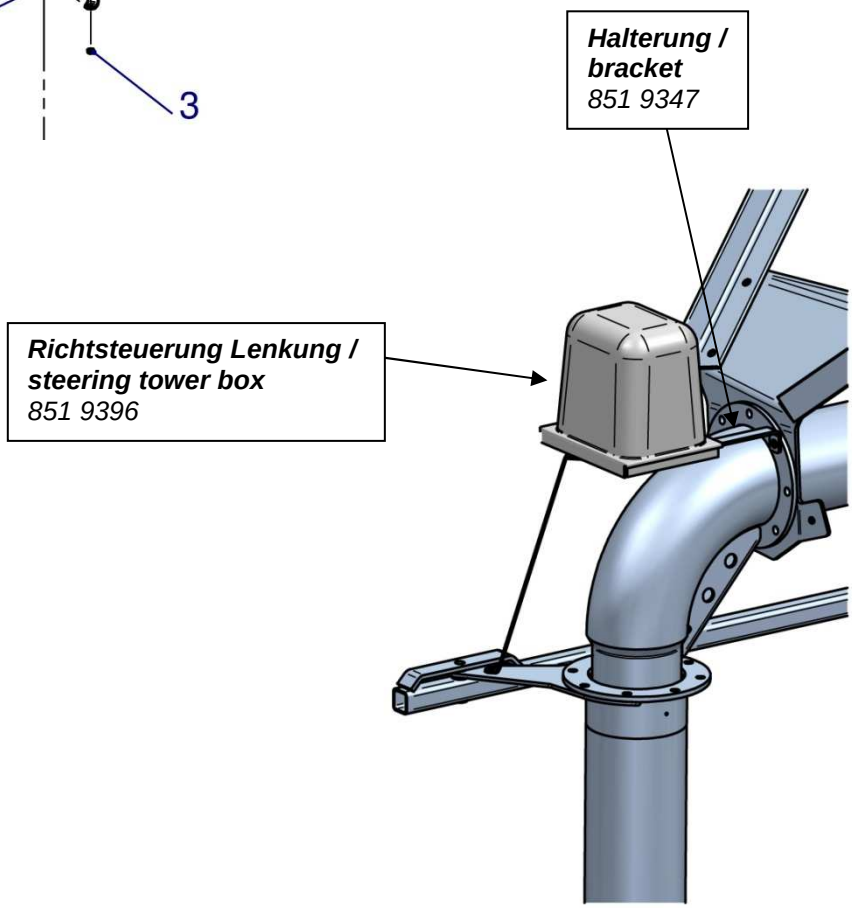

Steering tower box

WARNING: The sensor allows a maximum rotation of *0° to 360°* and is limited by a mechanical stop. Never attempt to turn the sensor past this range with force.

WARNING: To protect the electronic components during transport, the *adapter sleeve* is not screwed tightly to the *sensor* at the factory. Tighten the screw on the *adapter sleeve* during assembly.

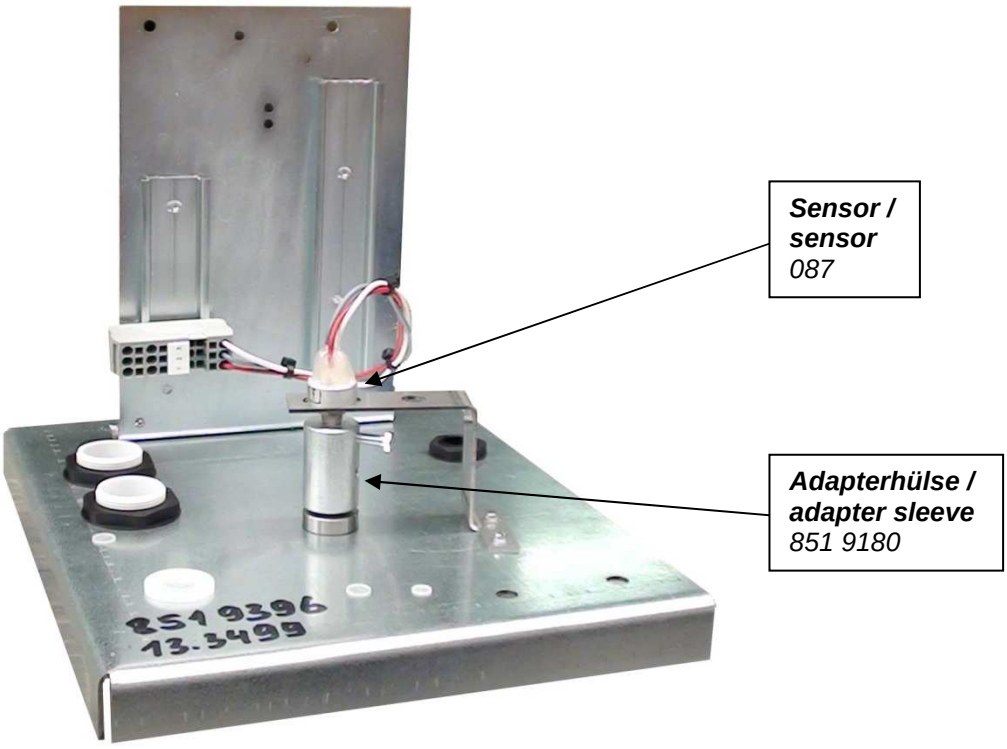

11.27 DRIVE TOWER CLIMBING BRACKET

Mount the *climbing bracket* to the outer *wheel base* as shown below

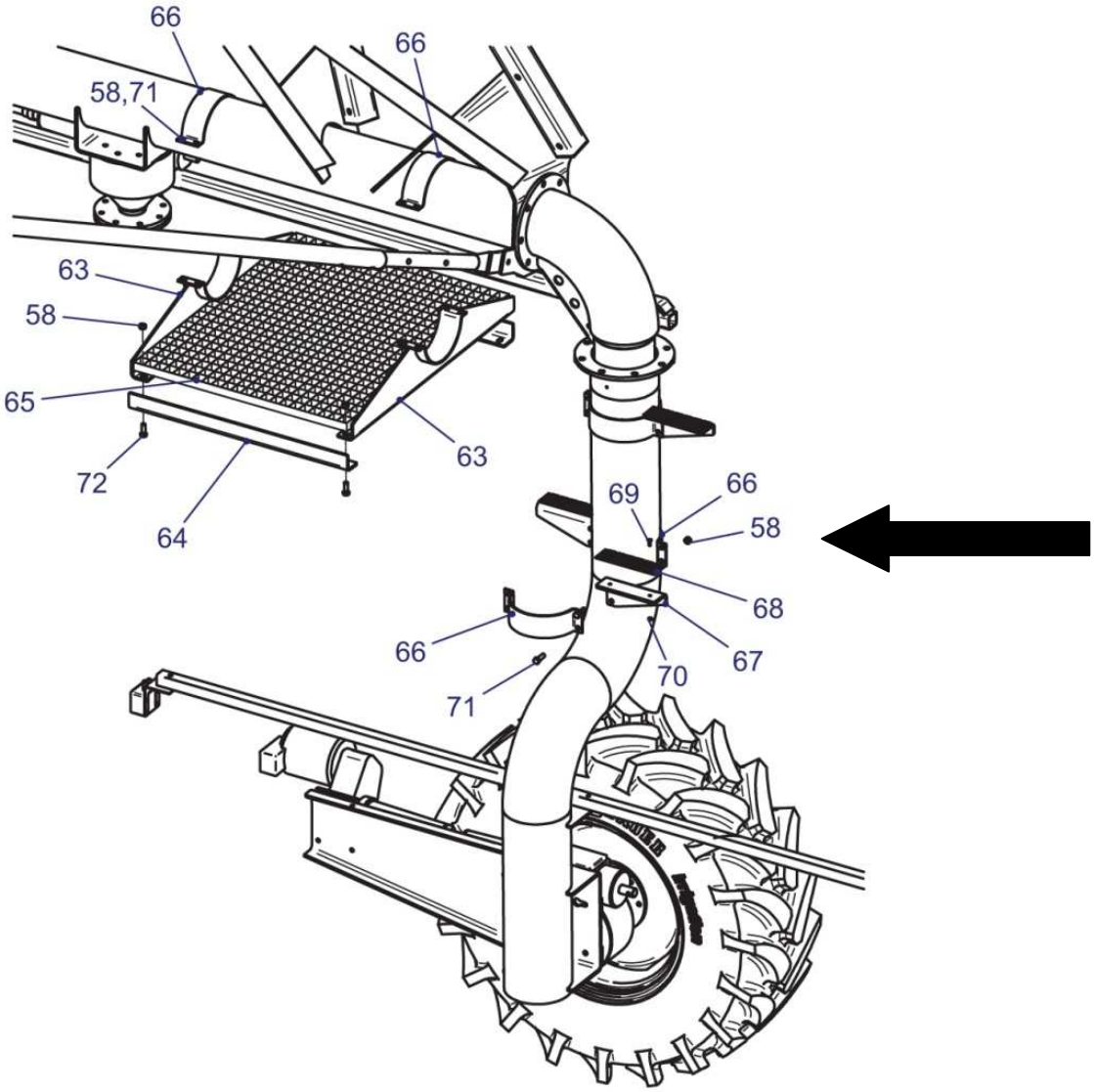

11.28 SUPPLY HOSE

Mount the *supply hose* as shown below. Note that the *supply hose* must be cut to the correct length during assembly. Shorten the hose far enough that it hangs down just below the *drive tower angle 3* of the tower (pivot).

If the *supply hose* is too long, it will collide with the *drive tower angle 3* during the swinging in movement (90° position).

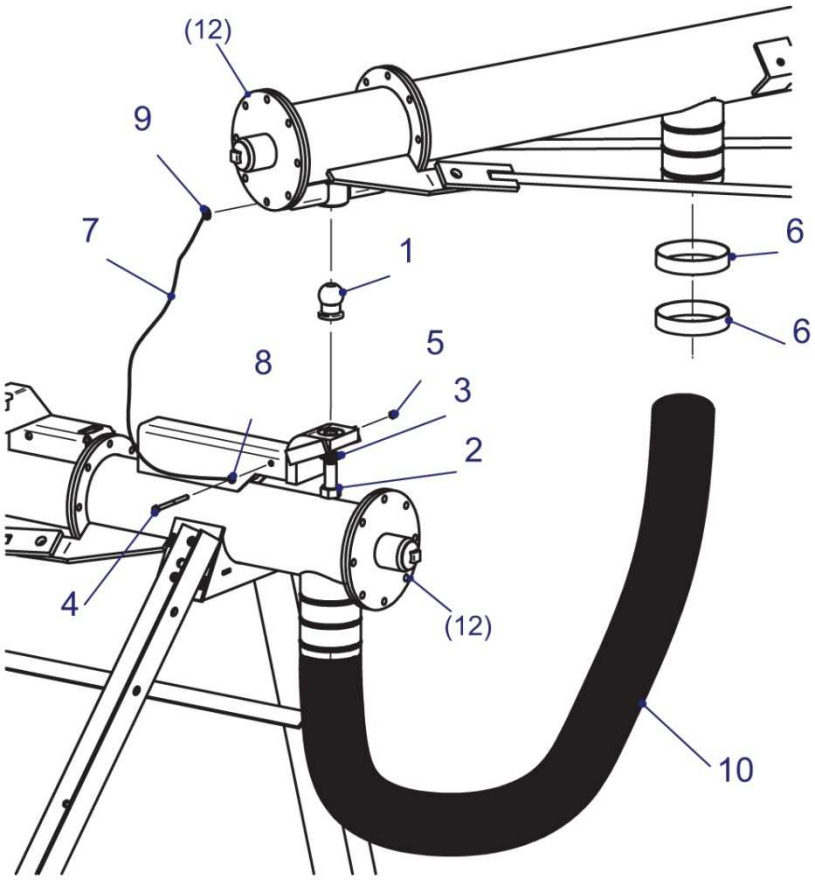

11.29 SHAFT GUIDE SEAL

Cut the *rope seal - 064 2110* to the appropriate length. Bond this together with *super glue* and lay it in the gap between the *shaft guide* and the *wheel base* as shown below.

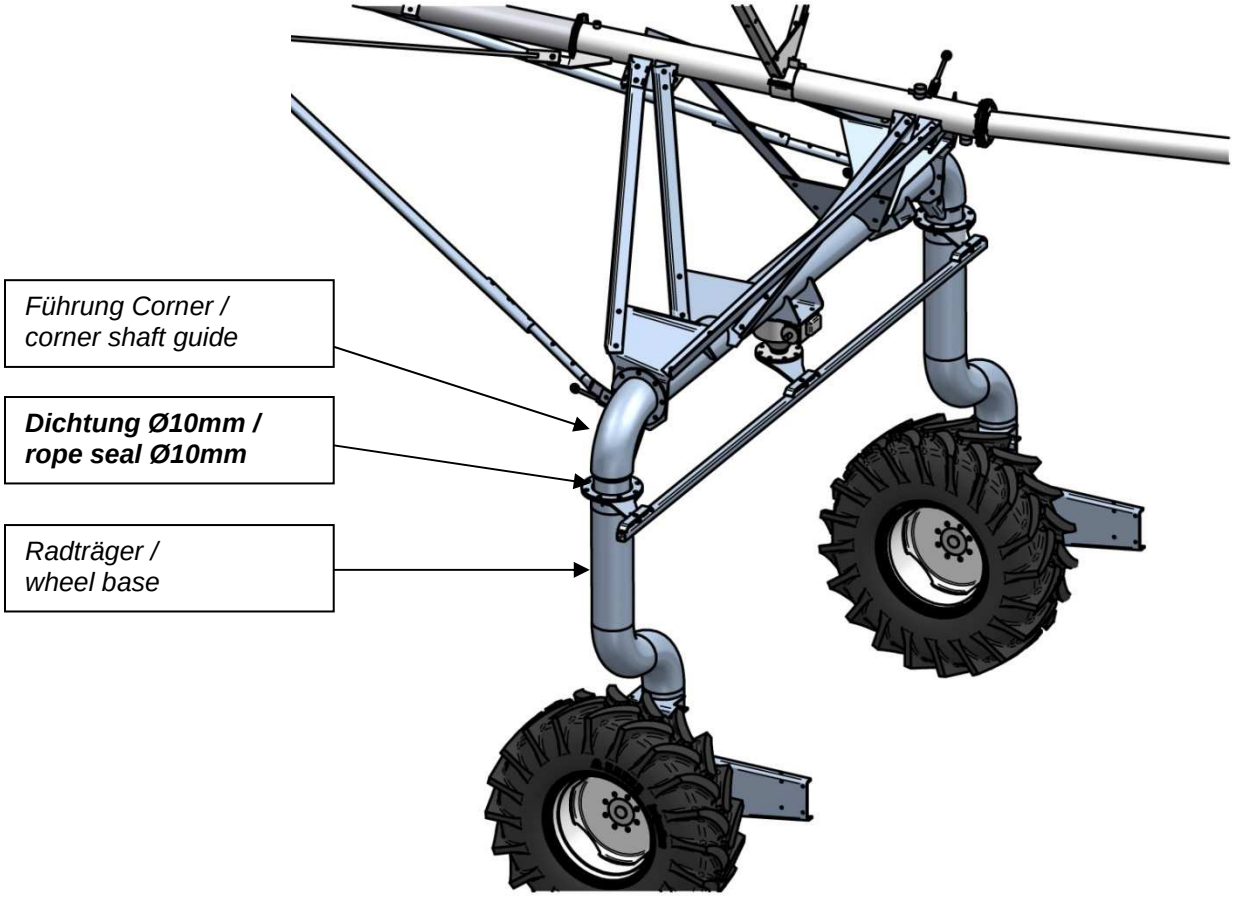

11.30 COUPLING THE CORNER SPAN

After completing the assembly of all components, couple the *corner span to the corner end pipe 2 of the end tower* (*pivot*). If necessary, position the *end tower* or the *corner drive tower* as necessary. You can move the *end tower* manually by turning the drive shaft directly with a tool.

12 ASSEMBLY OF THE SYSTEM AS A RETROFIT

12.1 END SPAN

Replace the last *end pipe* of the system with the ***CORNER END PIPE 2*** - *851 9311*. Close the truss structure here with the ***END FLANGE WITH SOCKET*** - *850 4652* (WARNING: A paper gasket is used for the end flange)**.** Mount the ball (position 3) as shown.

WARNING: Parts of the *angle sensor tower box* are screwed to the *end flange*. See here *11.3 ANGLE SENSOR TOWER BOX*.

WARNING: On e*nd span* / e*nd tower* use the ***shielded motor cable*** - *850 0636*.

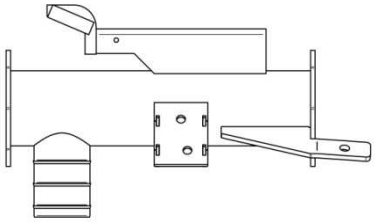

ENDROHR 2 CORNER / corner end pipe 2
851 9311

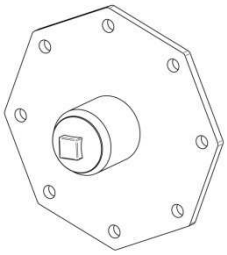

ENDFLANSCH MIT MUFFE / end flange w. socket
850 4652

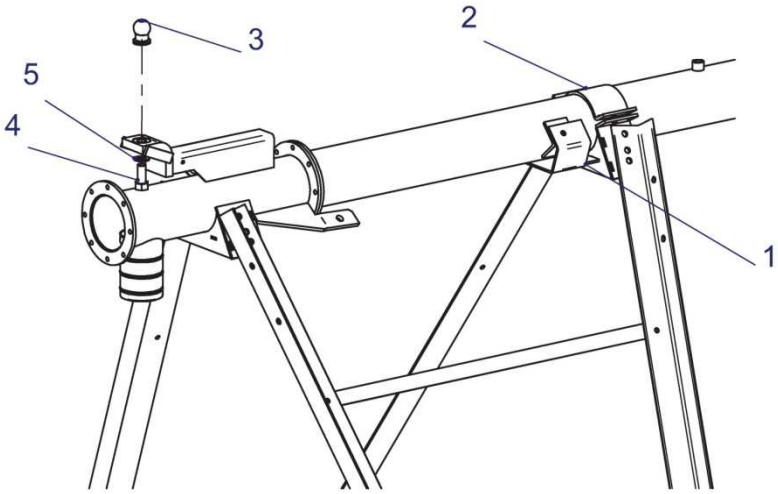

Teil Nr. Item No.	Art.Nr. Part No.	Benennung Description
1	851 6640	Konsole / Bracket
2	851 6644	Schellenoberteil / Clamp Top Part
3	850 6471	Kugel / Ball
4	061 1164	Schraube / Screw M24 x 55 - DIN 933
5	061 2015	Scheibe / Washer DIN 125 - A25

12.2 GPS MODULE

If you previously purchased a *CENTERSTAR* with *universal PRO-G*, remove the *GPS module* from the *end control* of your existing system. First disconnect all plug connections and install the *GPS module* into the *corner end tower control unit*. Here you will find the same mounting bracket as in your existing *end control*. Reconnect the *GPS module* using the required plug connections.

The associated *GPS antenna* can either be taken from your existing *end control* or you may use the existing *end control cover* and place this directly on the *angle sensor tower box*.

12.3 RESISTORS

Remove the 3 power resistors from your existing *end control* and install these in one of the neighboring *tower boxes* according to the circuit diagram.

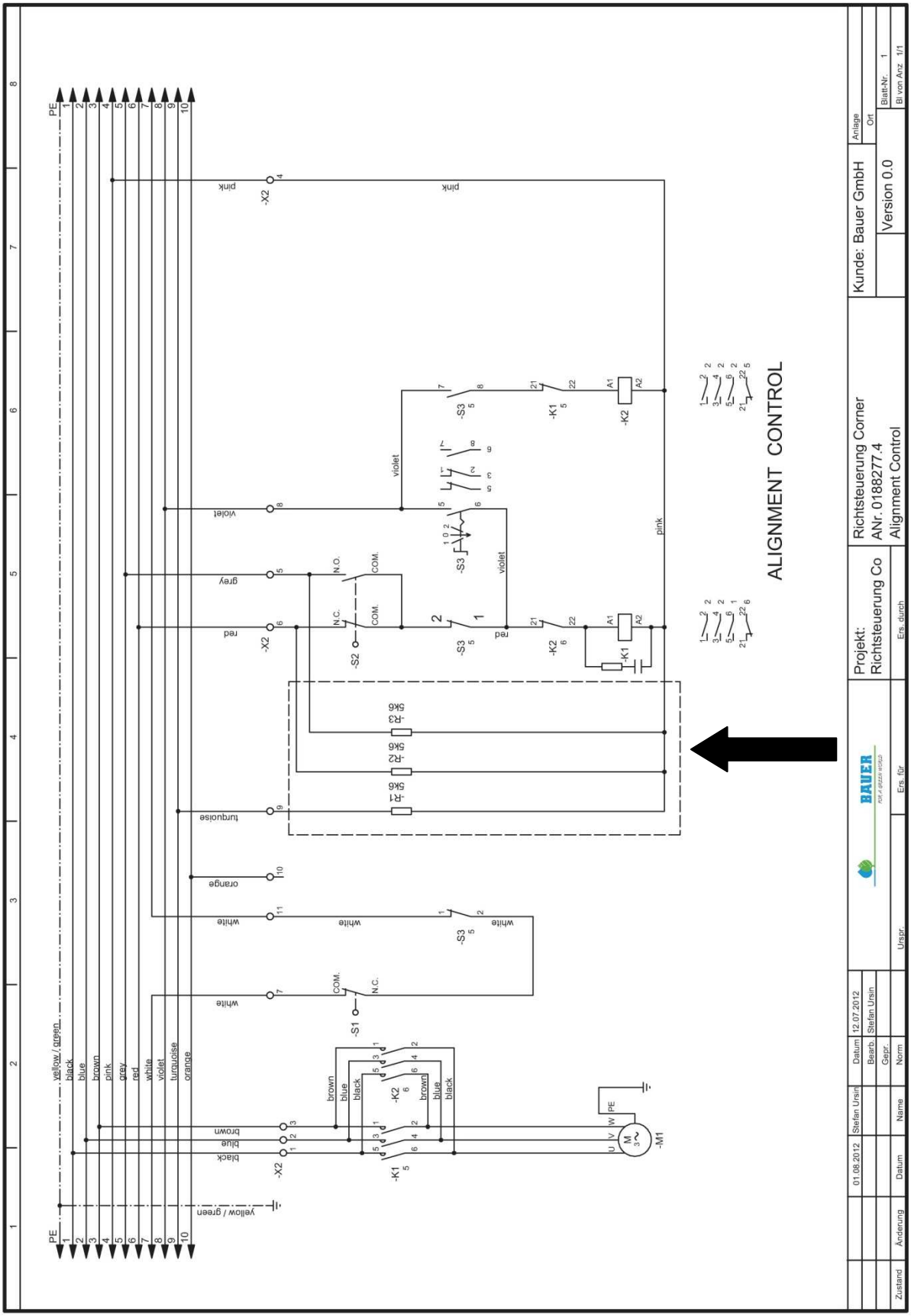

13 ELECTRICAL CONNECTION

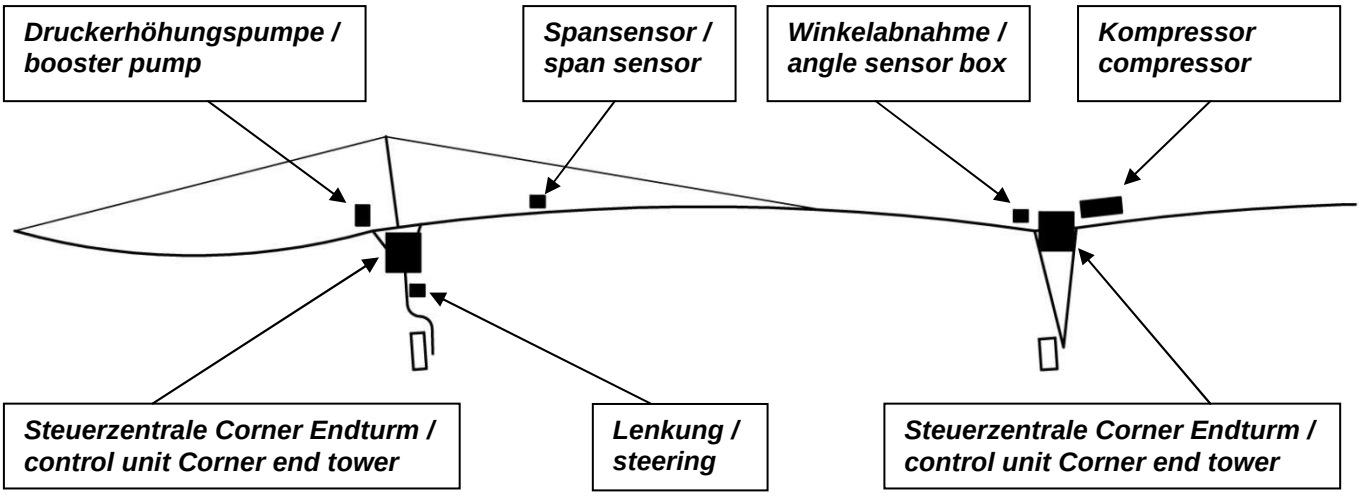

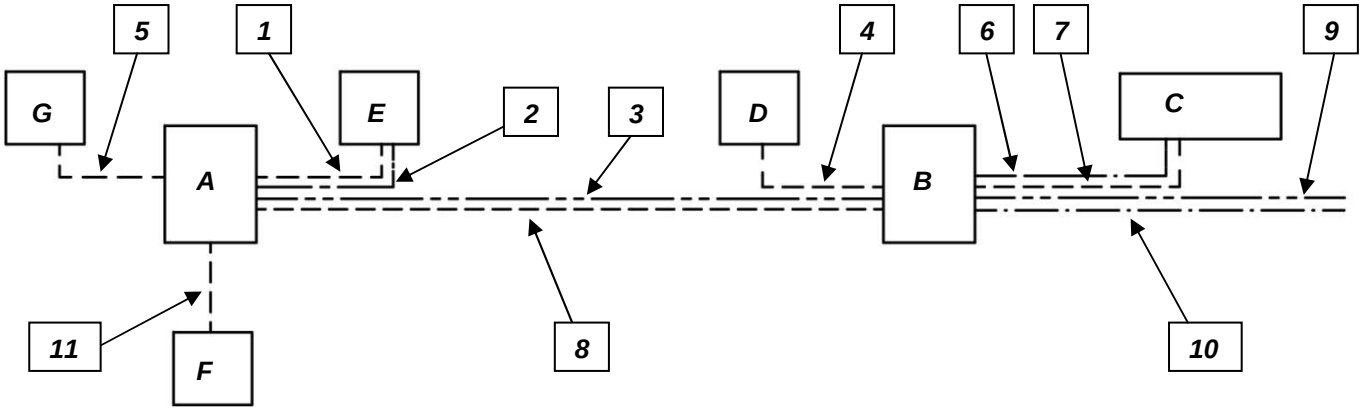

A *Steuerzentrale Corner Fahrturm* / control unit corner drive tower
B *Steuerzentrale Corner Endturm* / control unit corner end tower
C *Kompressor - Düsensteuerung* / compressor - nozzle control
D *Richtsteuerung Winkelabnahme* / control box - angle sensor
E *Richtsteuerung Spansensor* / control box - span sensor
F *Richtsteuerung Lenkung* / control box - steering
G *Druckerhöhungspumpe* / booster pump

1 *Leitung Sicherheitsschalter* / cable safety switch - **2 x 1²**
2 *Leitung Spansensor* / cable span sensor - **3 x 0,5²**
3 *Leitung CAN Bus* / cable CAN bus - **2 x 1²**
4 *Leitung Winkelabnahme* / cable angle detection - **3 x 1,5²**
5 *Leitung PIVOT* / cable PIVOT - **4 x 6² + 7 x 1,5²**
6 *Leitung Pneumatiksteuerventile* / cable pneumatic control valve - **3 x 0,75²**
7 *Leitung Kompressor* / cable compressor - **5 x 1,5²**
8 *Leitung PIVOT* / cable PIVOT - **4 x 6² + 7 x 1,5²**
9 *Leitung CAN Bus* / cable CAN bus - **2 x 1²**
10 *Leitung PIVOT* / cable PIVOT - **4 x 6² + 7 x 1,5²**
11 *Leitung Lenkungssensor* / cable steering sensor - **3 x 1,5²**

14 ELECTRICAL WIRING DIAGRAMS

14.1 CONTROL UNIT CORNER END TOWER

14.1.1 CONTROL UNIT CORNER END TOWER - INFEED

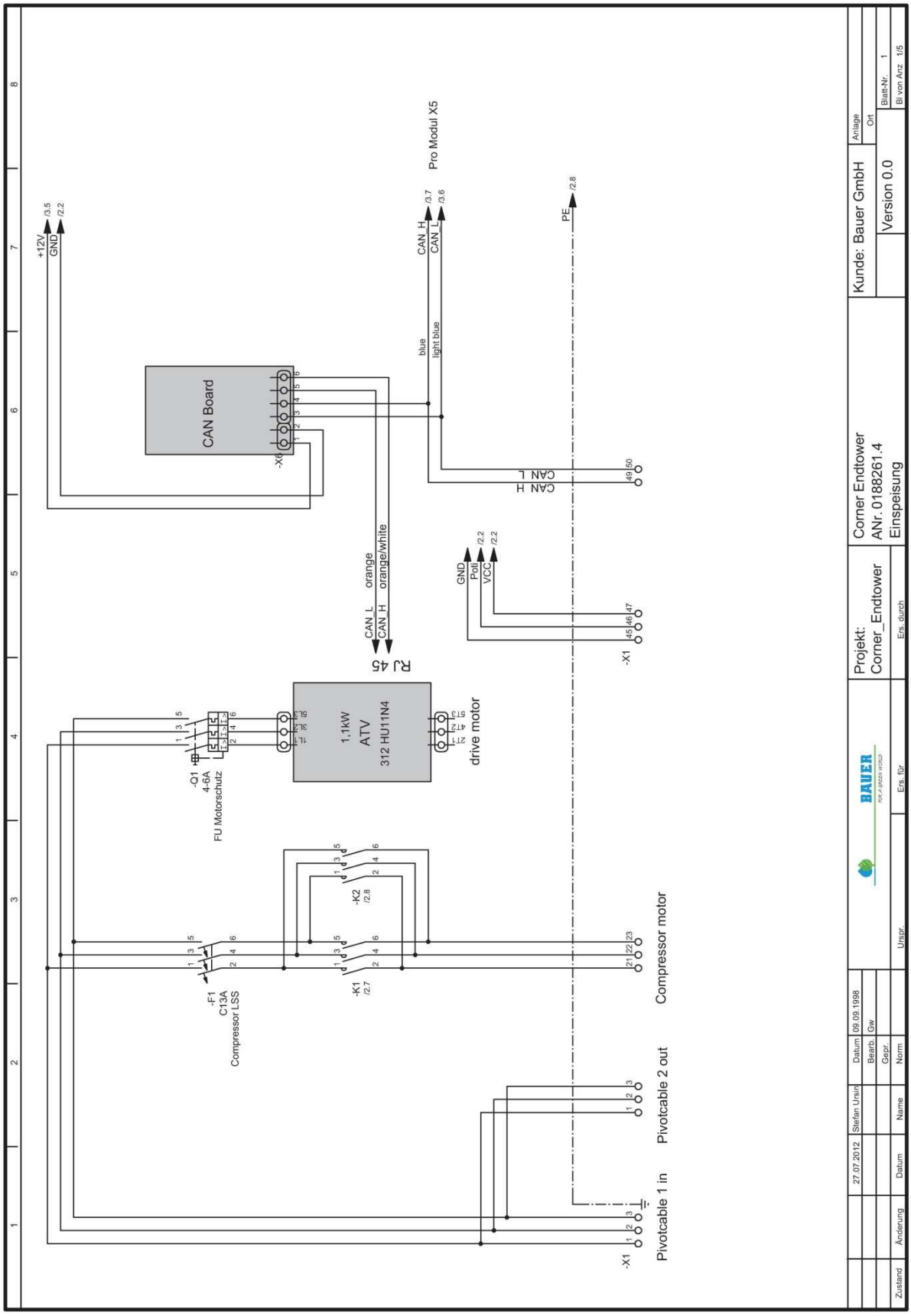

14.1.2 CONTROL UNIT CORNER END TOWER - CONTROL PRO1

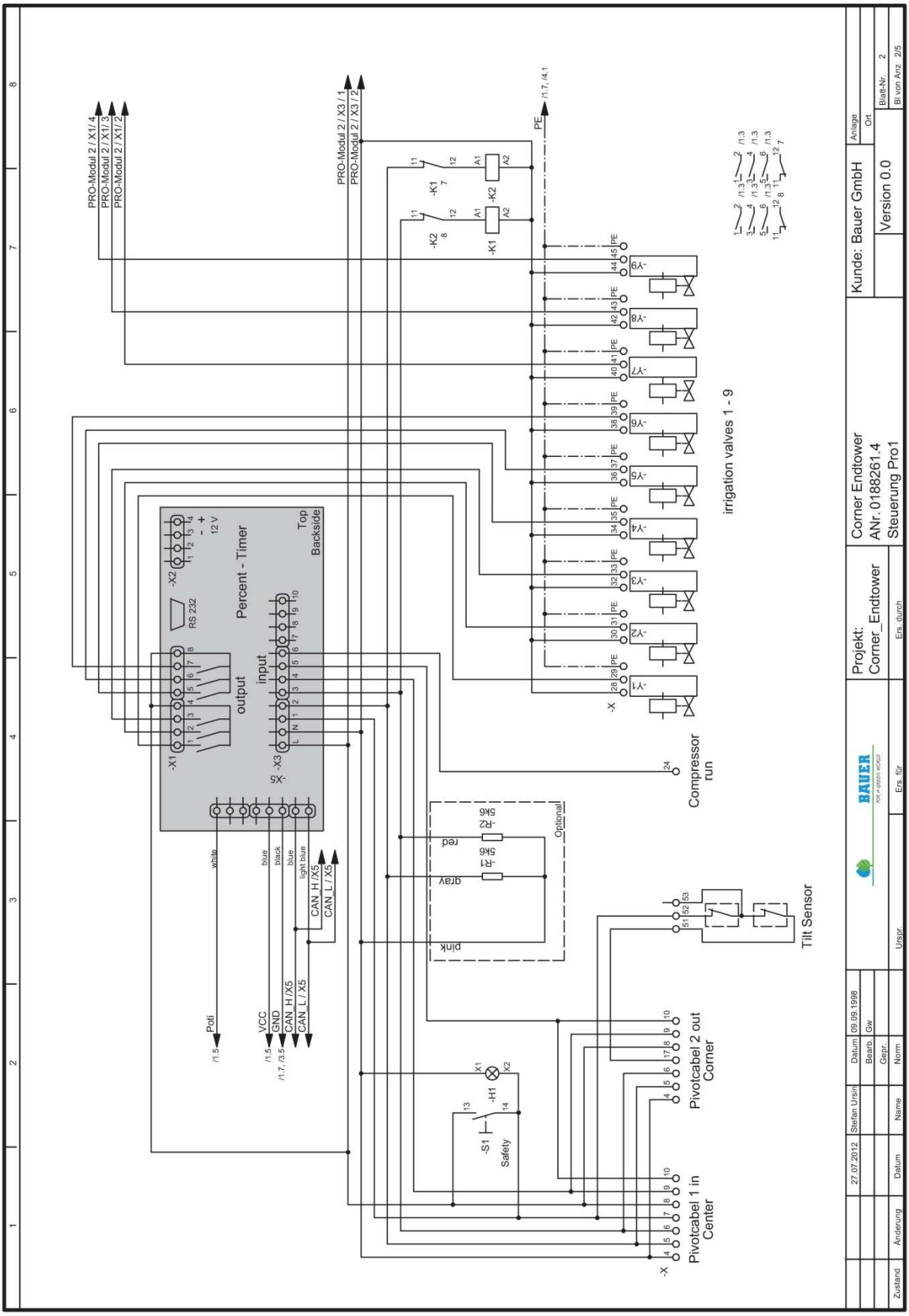

14.1.3 CONTROL UNIT CORNER END TOWER - CONTROL PRO2

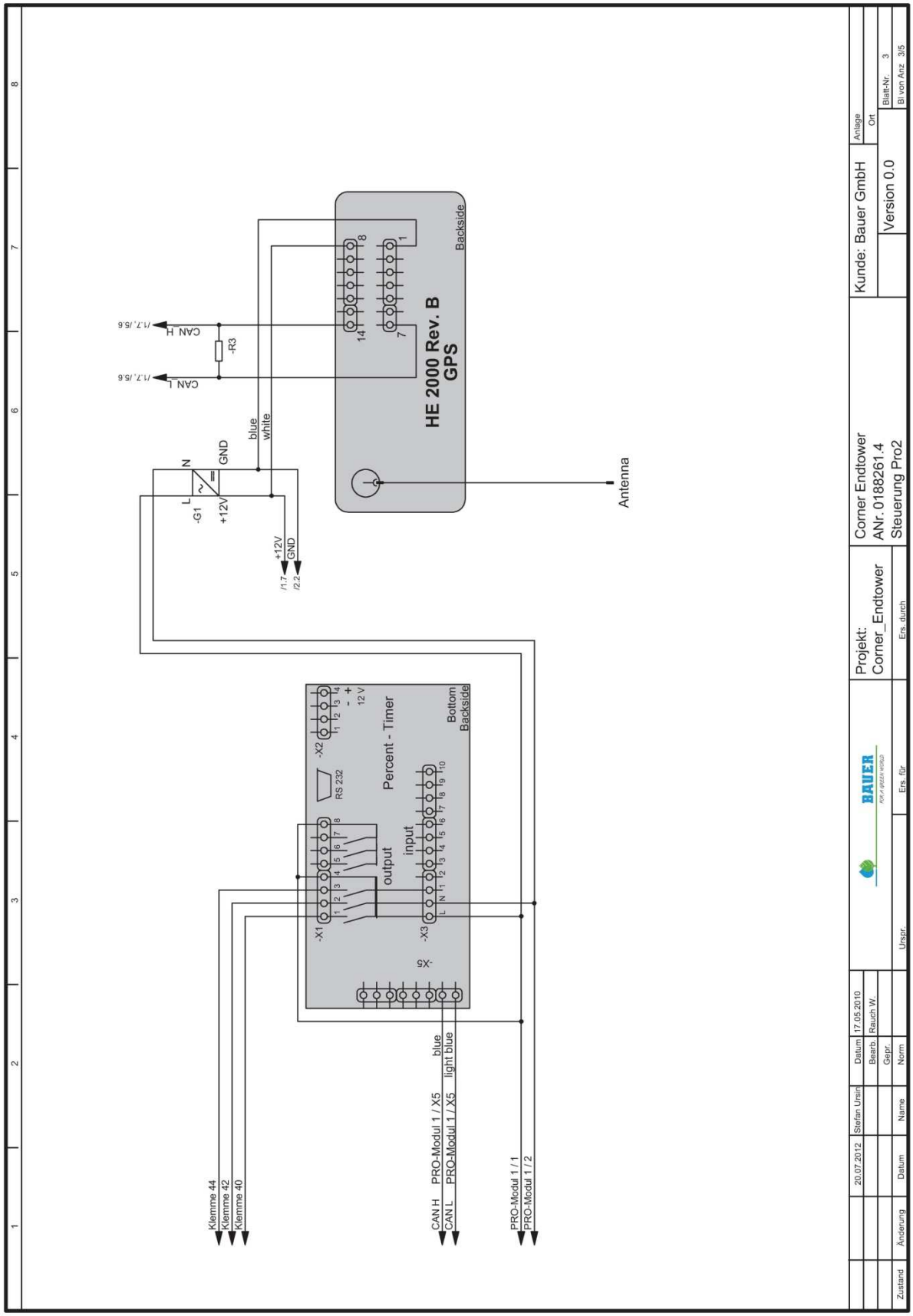

14.1.4 CONTROL UNIT CORNER END TOWER - ELECTRICAL CONNECTION PLAN

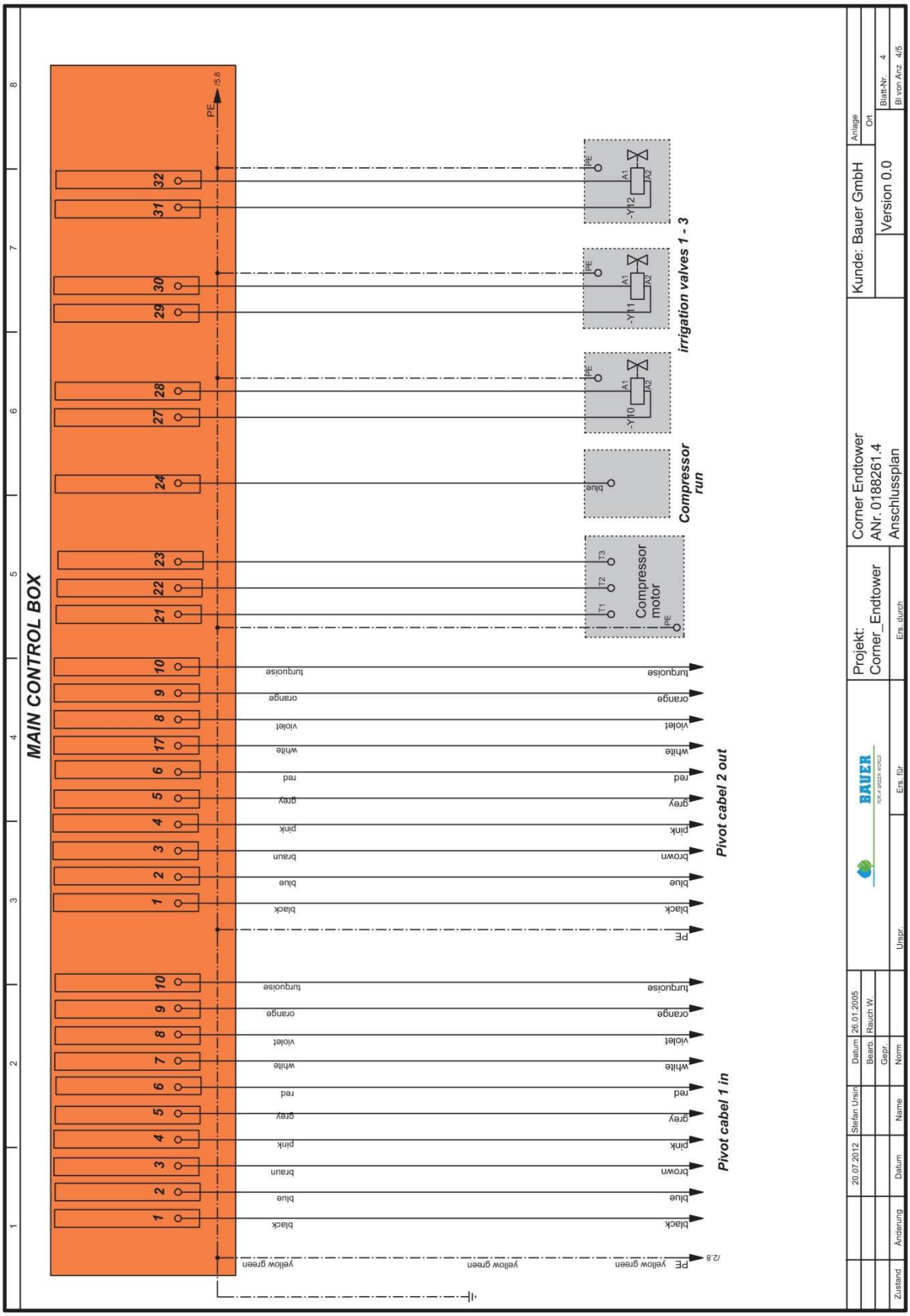

CONTROL UNIT CORNER END TOWER - CONNECTION PLAN

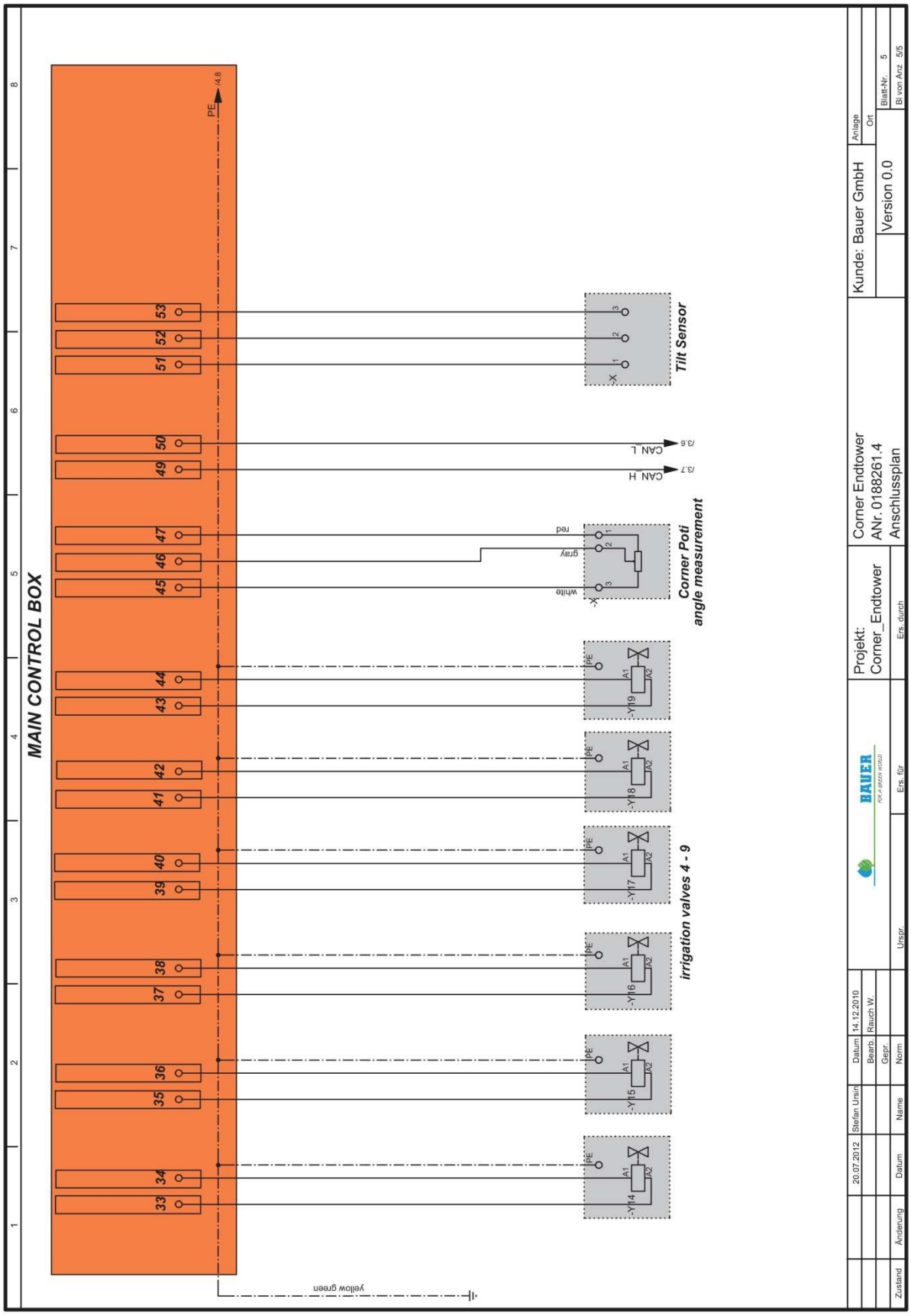

14.2 CONTROL UNIT CORNER DRIVE TOWER

14.2.1 CONTROL UNIT CORNER DRIVE TOWER - INFEED

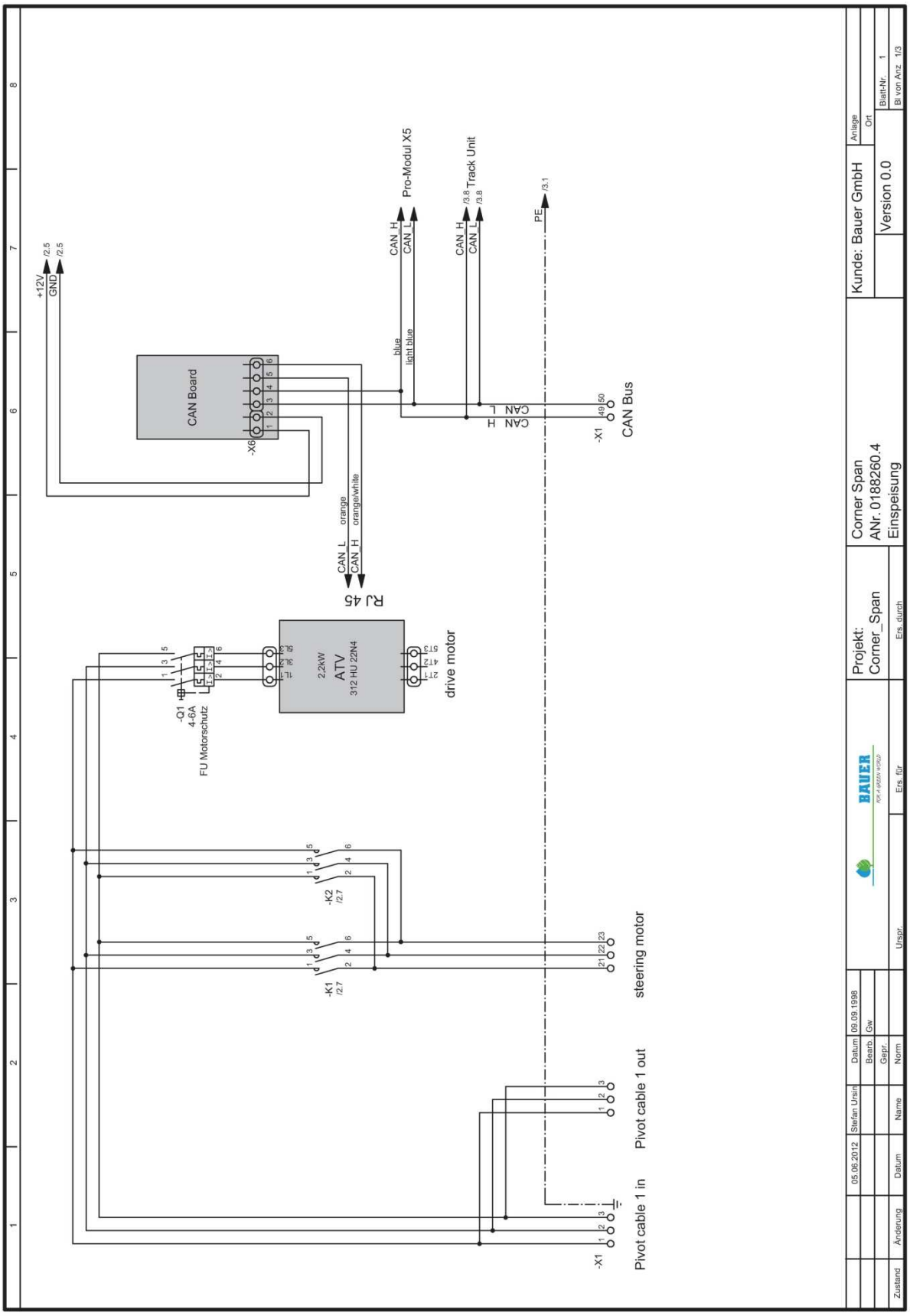

14.2.2 CONTROL UNIT CORNER DRIVE TOWER - CONTROL

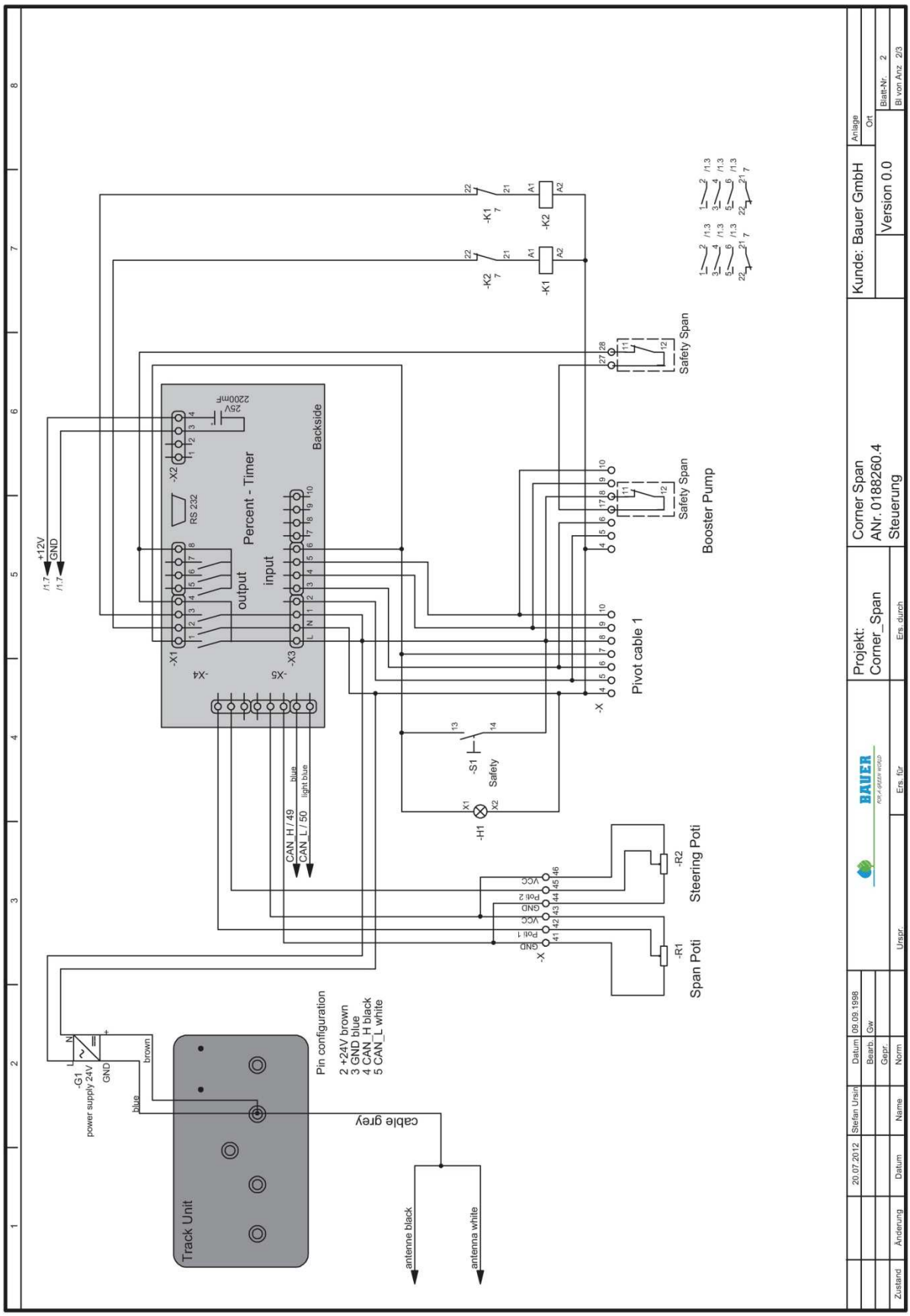

14.2.3 CONTROL UNIT CORNER DRIVE TOWER - ELECTRICAL CONNECTION PLAN

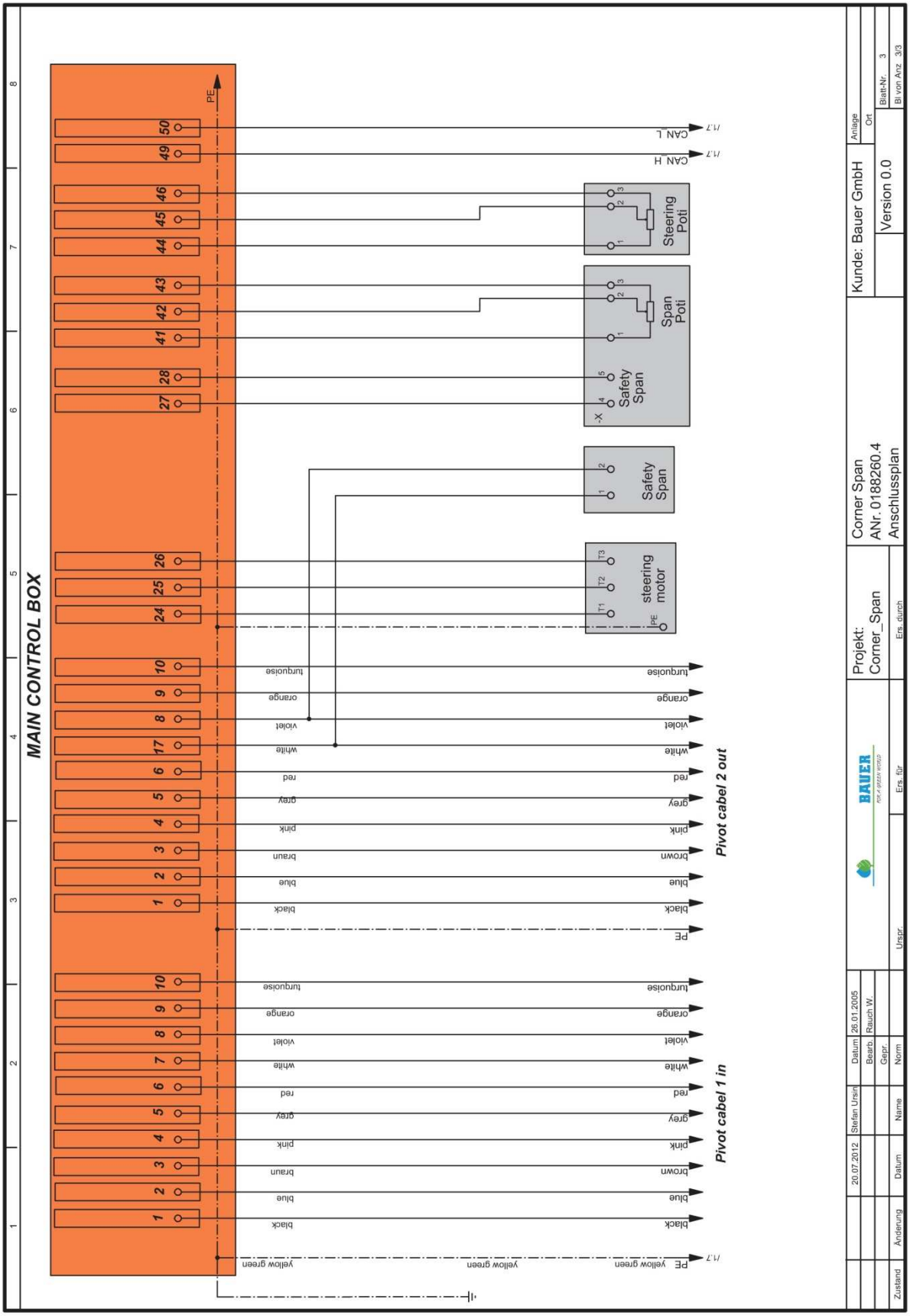

14.3 TOWER BOXES

14.3.1 TOWER BOX CORNER

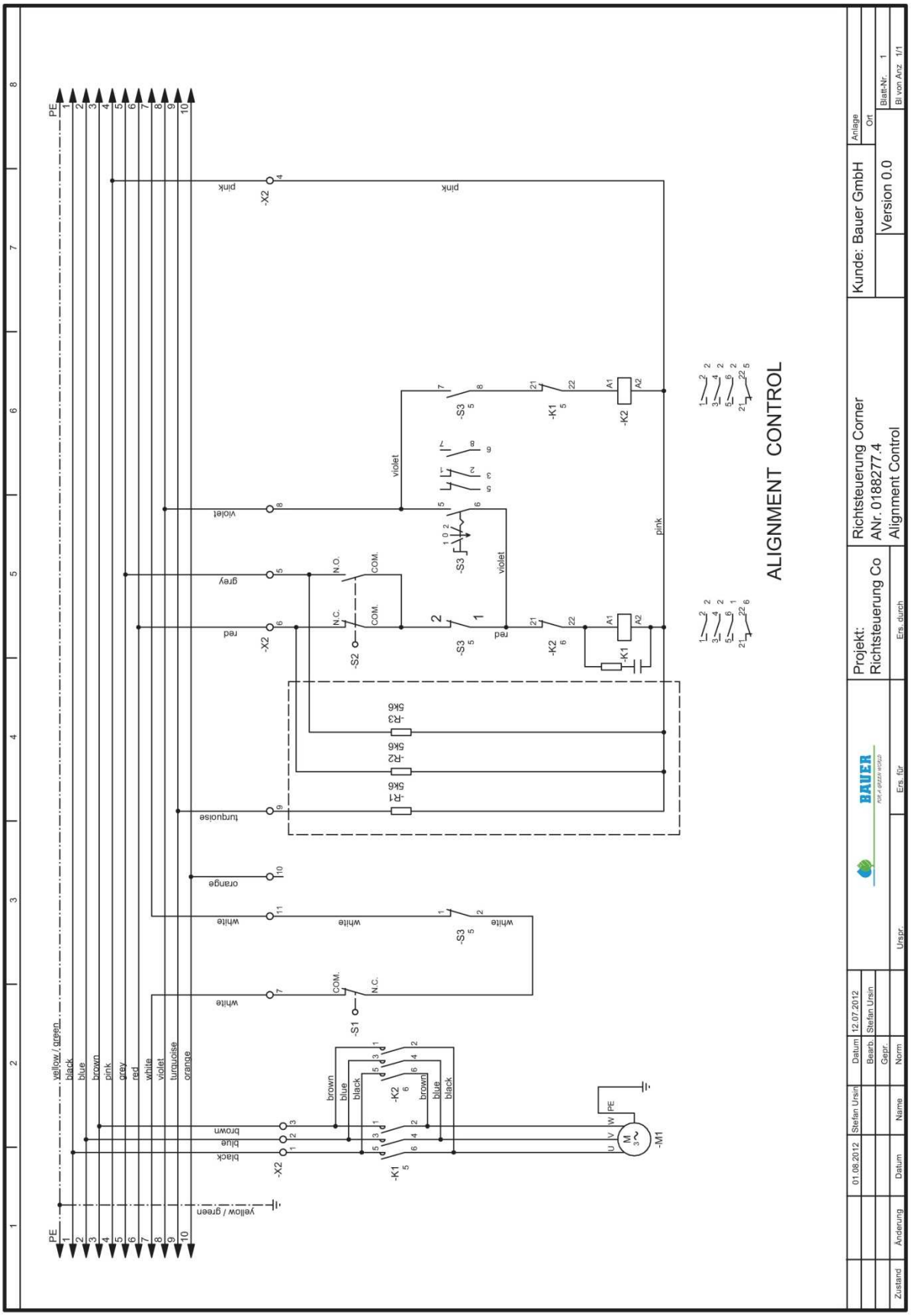

15 DECLARATION OF CONFORMITY

EC Declaration of Conformity

according to EC Directive 2006/42/EG

The manufacturer

Röhren- und Pumpenwerk BAUER Gesellschaft m.b.H.
Kowaldstraße 2, 8570 Voitsberg, Austria
Tel: +43 3142 200-0; Fax: +43 3142 200-320/-340

herewith confirms that the machine mentioned below

Designation of machine **BAUER CORNER SYSTEM**
Machine type / basic units

corresponds analogously to the requirements of the Machinery Directive 2006/42/EG.

In case of modification of the machine not accorded with BAUER GmbH, this declaration will cease to be valid.

The following standards as amended have been applied analogously:

DIN EN ISO 12100-1	Safety of machinery - Basic concepts, general principles for design Part 1: Basic terminology, methodology
DIN EN ISO 12100-2	Safety of machinery - Basic concepts, general principles for design Part 2: Technical principles
DIN EN 60204-1	Safety of machinery - Electrical equipment of machines Part 1: General requirements
EN ISO 14121-1	Safety of machinery - Risk assessment Part 1: Principles
ÖNORM EN ISO 13857	Safety of machinery - Safety distances to prevent hazard zones being reached by upper and lower limbs

Standards related to products

DIN EN 909	Agricultural and forestry machinery - Centre pivot and moving lateral types irrigation machines - Safety

Person in charge of documentation: Thomas Theissl, Kowaldstraße 2, 8570 Voitsberg, Austria,

Technical Designer in Charge

Commercial Manager

Voitsberg, 16.01.2012